SmartLine

Technical Information

SLG 700 SmartLine Guided-Wave Radar Level Specification
34-SL-03-03, December 2017

Introduction

Part of the SmartLine® family of products, and based on extensive Honeywell Enraf radar experience, the SLG 700 series level transmitters feature high performance guided wave radar level technology. They provide high accuracy, stability, and applicability suitable for a variety of level and interface applications. SmartLine SLG 700 level transmitters are ideally suited for your demanding process tank level needs.

The SmartLine Level transmitter features the same powerful features as the other transmitters in the SmartLine family including modular design, polarity insensitivity, transmitter messaging, tamper notification, and integration with Experion® PKS thus providing the highest level of compatibility assurance and integration capabilities.
A new SmartLine Application and Validation Tool provides a new level of user experience and increases engineering productivity.

Best in Class Features:

- Two-wire, loop-powered 4-20 mA transmitter
- Accuracy ±3 mm or +0.03% of measured distance whichever is greater
- Repeatability ±1 mm
- Integral dual seal design for safety based on ANSI/NFPA 70-202 and ANSI/ISA 12.27.01
- Process Temperature range: -60 to 450 °C
- Process Pressure range: -1 to 400 bar
- Wetted parts include SS316L or Hastelloy-C (C-276)
- Automatic temperature compensation
- Advanced local display and local push buttons (optional)
- Polarity insensitive electrical connections
- Comprehensive on-board diagnostic capabilities
- Full compliance to SIL 2/3 requirements (option)
- Modular design
- Dual compartment design
- 3 m remote mount housing (optional)

Figure 1 - SLG 700 SmartLine Level Transmitter

Best in Class Features (continued):

- 4-20 mA, HART® and FOUNDATION™ Fieldbus output
- External zero, span, & configuration capability
- Maximum range: 50m

Communications / Output Options:

- 4-20 mA DC
- HART® (version 7.0)
- FOUNDATION™ Fieldbus

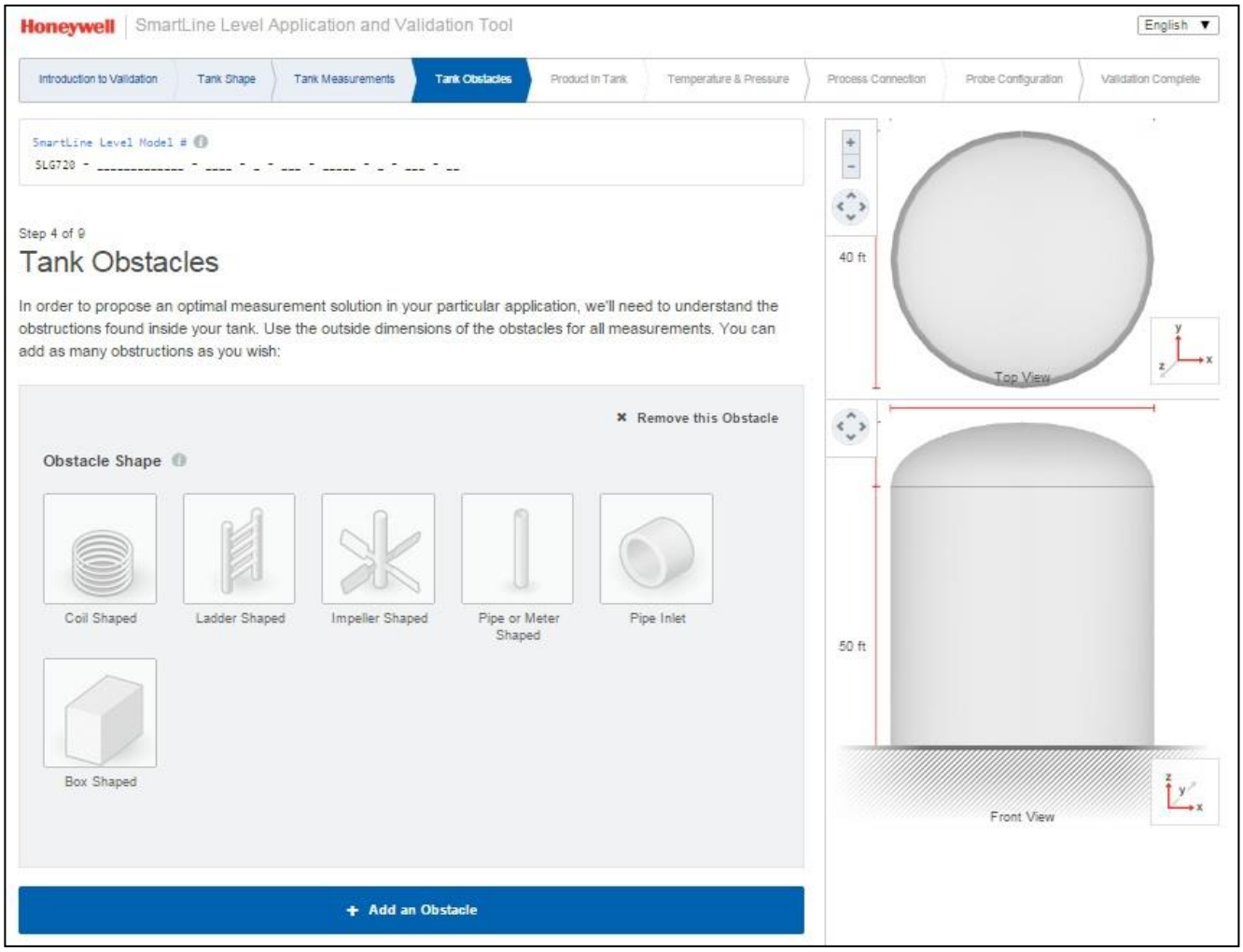

Figure 2 - Inserting tank specific details into Application and Validation Tool.

Description

The SmartLine Guided Wave Radar Level transmitter utilizes Time Domain Reflectometry (TDR) technology which is proven to be effective for a majority of level measuring applications.

Unique Out-of-the-Box, Full User Experience

The user experience of the SmartLine Level transmitter addresses one of the most common failure modes associated with specifying, ordering and implementing level transmitters, which is the specification of the correct level transmitter for the tank level application. Unique to the SmartLine Level offering is a new, online SmartLine Application and Validation Tool (AVT), found at https://config.honeywellsmartline.com/, this allows users to specify their tank level application and the options desired for their level transmitter. The AVT intelligently guides the user through the engineering process and electronically captures and documents the choices and inputs.

In addition to serving as engineering documentation, the AVT output also serves as input to the Honeywell order management system thus ensuring correct input of the transmitter model and the advantage of a transmitter with configuration parameters already specified to match the targeted tank application. Errors are eliminated and the engineering effort is preserved from start to finish.

The SmartLine Application and Validation Tool also allows users to collaboratively use and share the active session with any web connected colleague or expert. This interactive, collaborative capability eliminates roadblocks and delays, thus users can access resources to help start and finish the engineering task in a single effort. This online tool also dynamically reformats the user interface to correctly display on an Apple iPad®, iPhone® or Android™ device.

Unique Indication/Display Options

The SmartLine SLG series level transmitter's modular design accommodates a unique advanced graphics LCD display with many unparalleled features (as an option).

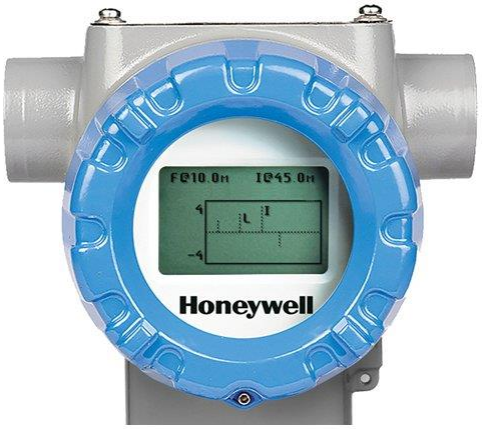

Advanced Graphics LCD Display Features

- Modular (may be added or removed in the field)
- 0, 90, 180, & 270 degree position adjustments
- Standard and custom measurement units available. (custom measurement units applicable only for FF)
- Eight display screens with 3 formats are possible
- 128 by 64 dot matrix graphics display
- Large PV, Bar graph and Trend graph format supported (for any of the 8 screens). Echo stem plots with Distance to Product and Distance to Interface Configurable screen rotation timing
- The Display supports English, German, French, Spanish, Italian, Turkish, Russian, Chinese and Japanese

Diagnostics

SmartLine transmitters all offer digitally accessible diagnostics which aid in providing advanced warning of possible failure events minimizing unplanned shutdowns, providing **lower overall operational costs**

System Integration

- SmartLine communications protocols all meet the most current published standards for HART® or FOUNDATION™ Fieldbus.
- Integration with Honeywell's Experion PKS offers the following unique advantages.
  - Transmitter messaging
  - Maintenance mode indication
  - Tamper reporting
  - FDM Plant Area Views with Health summaries
  - The SLG series is Experion tested to provide the highest level of compatibility assurance.

Modular Design

To help contain maintenance and inventory costs, all SLG series transmitters are modular in design supporting the user's ability to change electronic modules without affecting overall performance. Electronic modules may be swapped with another electronics module without losing in-tolerance performance characteristics.

Modular Features

- Exchange / replace all electronic modules
- Add or remove lightning protection (terminal module)

With no performance effects, Honeywell's unique modularity results in ***lower inventory needs and lower overall operating costs.***

Configuration Tools

Integral Three Button Configuration Option

Suitable for all electrical and environmental requirements, SmartLine offers the ability to configure the transmitter and display via three externally accessible buttons. Zero and span setting capability is also available via these optional buttons if a display is not selected.

HandHeld Configuration

SmartLine transmitters feature two-way communication and configuration capability between the operator and the transmitter. This is accomplished via Honeywell's field-rated Multiple Communication Configurator (MCT404).

The MCT202 and 404 are capable of field configuring DE and HART® Devices and can also be ordered for use in intrinsically safe environments. All Honeywell transmitters are designed and tested for compliance with the offered communication protocols and are designed to operate with any properly validated handheld configuration device.

Field Service Tool – DTM based technology

SmartLine Level utilizes the standard unified DTM technology to access device parameters but utilizes its fullest potential in the creation of our new Field Service Tool. Using a commonly available DTM container, the SmartLine Level Field Service Tool provides both a novice mode and an expert user mode. Novice users are offered a guided experience to setup the device parameters while expert users can easily access the parameters desired through the organized parameter pages. The DTM runs on any PC and avoids the need for a handheld configurator.

FDM and FDM Express

Honeywell's Field Device Manager (FDM) Software and FDM Express are available for managing HART® & FOUNDATION™ Fieldbus device configurations.

General Specifications

Parameter	Description		
Measurable media	Liquids		
Measurements performed	Level, volume, interface		
Process Storage Tank types	Vertical and horizontal cylinders, rectangular tanks, spheres, stilling / bypass wells		
SIL certification	SIL 2/3		
Maximum Measuring range	Liquids	50 m (164 ft)	
Available probe types	Rod, wire, coax		
Wetted materials	SLG 720: PTFE, Duplex 2205 and 316L or UNS10276 SLG 726: 316L, Aluminum, Glass (Borofloat 33®), PEEK (GF30), Gold, Viton		
O-Ring Seal Materials Please see Figure 8 and Figure 9	Material	Min Temp	Max Temp
	Viton® or Fluorocarbon	-26 °C	200 °C
	Ethyelene Propylene (EPDM)	-40 °C	150 °C
	Kalrez 6375 perfluorelastomer	-20 °C	200 °C (sat steam max 150 °C)
	Buna-N	-40 °C	120 °C
	Metallic - 17-4 PH, Silver plated	-60 °C	450 °C
	Metallic - Alloy 718 NACE, Gold plated	-60 °C	450 °C
Electronic Housing	Pure polyester powder-coated low copper (<0.6%) aluminum Meets NEMA 4X, IP66, IP67 All stainless-steel housing and remote electronics (with 3 m cable) are optional		
User Interface	3 button keypad		
Display	128 x 64 pixels LCD		
Output Units	Level: ft, in, m, cm, or mm Volume: ft^3, in^3, US gal, Imp gal, barrels, yd^3, m^3, liters Rate: ft/s, m/s, in/min, m/h, ft/min, in/sec		
Output Process Variables	• Level • Percentage Level • Distance to Level • Level Rate • Volume • Vapor (Ullage) Thickness • Vapor (Ullage) Thickness % • Vapor (Ullage) Volume • Distance to Interface • Interface Level • Interface Level Rate • Upper Layer Thickness • % Interface Level • Lower Volume • Upper Volume		
Language	English, German, Italian, French, Spanish, Russian, Turkish, Chinese and Japanese		
Wiring Entry	½ -inch NPT(female), M20 (female)		
Wiring	Accepts up to 16 AWG (1.5 mm diameter).		
Mounting	Available with compact housing or remote mount housing option		
Dimensions	See page 25 for dimensional drawings.		
Net Weight	SLG 700 series: 3.2 kilograms (7 lbs) for aluminum housing		

Operating Conditions – All Models

Parameter	Rated Condition		Operative Limits		Transportation and Storage	
	°C	°F	°C	°F	°C	°F
Ambient Temperature[1]	-40 to 85	-40 to 185	-40 to 85	-40 to 185	-55 to 120	-67 to 248
Process Connector[2]						
SLG 720	-40 to 200	-40 to 392	-40 to 200	-40 to 392	-55 to 125	-67 to 257
SLG 726	-60 to 450	-76 to 842	-60 to 450	-76 to 842	-55 to 125	-67 to 257
Humidity %RH	0 to 100		0 to 100		0 to 100	
Maximum Allowable Working Pressure (MAWP) [3, 4]	SLG720: 40 bar (580 psi) SLG726: 400 bar (5800 psi) See Figure 10 and Figure 11					
Supply Voltage and Load Resistance (HART®)	Voltage at transmitter terminals is 14.0 to 42.0 Vdc (IS versions limited to 30 Vdc) 0 to 1284 ohms (as shown in Figure 3. A minimum of 250ohms is required to support HART® communications.					
Supply Voltage (FOUNDATION Fieldbus)	Voltage at transmitter terminals is 9.0 to 32.0 Vdc (IS versions limited to 30 Vdc, FISCO limited to 17.5 Vdc)					

[1] **LCD Display operating temperature -20°C to +70°C . Storage temperature -30°C to 80°C.**

[2] **Rated condition and operative limit temperatures subject to O-Ring selection and ambient temperature conditions.**

[3] **Units can withstand overpressure of 1.5 x MAWP without damage**

[4] **Consult factory for MAWP of SLG 700 transmitter with CRN approval**

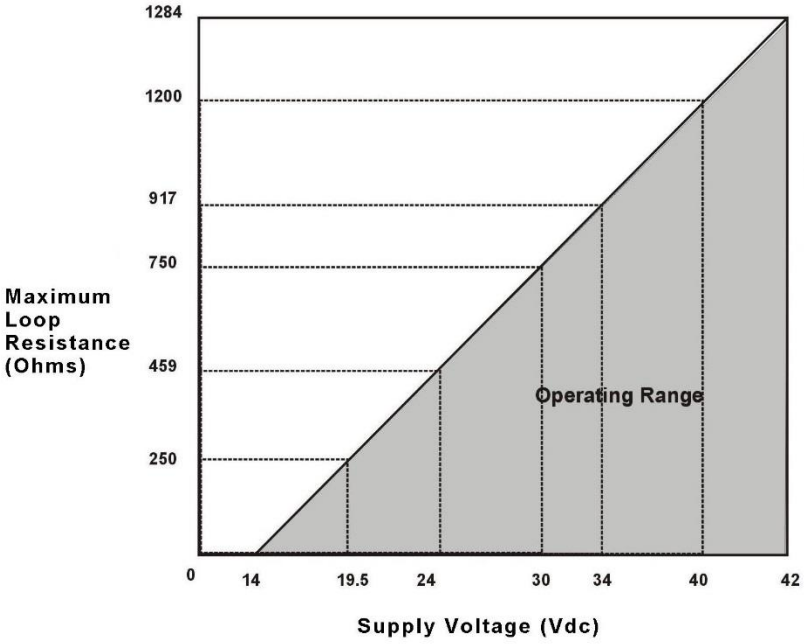

Note: A minimum of 250ohms of loop resistance is required to support communications.

Loop resistance = Barrier resistance + Wire resistance + Receiver resistance

Supply Voltage (Vdc)	Max. Loop Resistance (Ohms)
14	0
19.5	250
24	459
30	750
34	917
40	1200
42	1284

Figure 3 – Operating Voltage (Supply voltage) and maximum allowable loop resistance (not applicable for Fieldbus™)

$R_{LOOP\ MAX}$ = maximum loop resistance (including safety barriers and wiring) that will allow proper Transmitter operation and is calculated as

$R_{LOOP\ MAX} = (V_{SUPPLY\ MIN} - V_{XMTR\ MIN}) \div 21.8$ mA.

Where: $V_{XMTR\ MIN}$ = 14V (Minimum Voltage at the terminals)

Performance Under Rated Conditions – All Models

Parameter	Description		
Measuring principle	**Time Domain Reflectometry (TDR)**		
Analog Output **Digital Communications:**	**Two-wire, 4 to 20 mA (HART® transmitters only)** **HART® 7 protocol or FOUNDATION™ Fieldbus ITK 6.0.1 compliant** **All transmitters, irrespective of protocol have polarity insensitive connection.**		
Output Failure Modes	**Compliance:** **Normal Limits:** **Failure Mode:**	**Honeywell Standard:** **3.8 – 20.8 mA** ≤ 3.6 mA and ≥ 21.0 mA	**NAMUR NE 43** **3.8 – 20.5 mA** ≤ 3.6 mA and ≥ 21.0 mA
Maximum Range	**50 m (164 feet)**		
Resolution	**±1 mm (0.04 inch)**		
Accuracy **Reference conditions are given in the table below**	**Rod/Coax**	**±3 mm**	
	Wire	**±0.03% of range or ± 3 mm (whichever is greater)**	
Ambient temperature Effect	**±0.2 mm/°K or ±15 ppm/°K of measured value whichever is greater**		
Repeatability	**±1 mm (0.04 inch)**		
Dielectric constant (minimum)	**1.4** (1.2 - using optional low DC algorithm)		
Rate of level change	up to 0.9 m/s (35.4 in)		
Damping Time Constant	**HART®: Adjustable from 0 to 60 seconds in 0.1 increments.** **Default Value: 2 seconds**		
Electromagnetic Compatibility	IEC61326 (All transmitters) *, NAMUR NE21 (HART® & 4-20mA)		
Lightning Protection Option	**Leakage Current: 10 uA max @ 42.0 VDC 93C** **Impulse rating:** **8/20 uS** **5000 A (>10 strikes)** **10000 A (1 strike min.)** **10/1000 uS** **200 A (> 300 strikes)**		

NOTE: The SLG 700 transmitter complies with the radiated immunity requirements when a coax probe is used AND/OR with any probe when the device is installed in a metallic vessel or stillwell. When the device is installed on an open-air tank or non-metallic tank the electromagnetic emissions levels will remain compliant with any probe, however, a coax probe is recommended if a strong electromagnetic field may be present near the probe.

Reference Conditions

Parameter		Unit	Reference Condition
Ambient Temperature		°C	25 ± 1
Process Temperature		°C	25 ± 1
Humidity		% RH	0 - 85
Flange diameter for rod, wire configurations		mm	>300
Reference product in the tank	Single	Not applicable	Air / Water
	Two (non-flooded)	Not applicable	Air / Oil (DC=2) / Water
Minimum distance to walls and obstacles		mm	400
Process pressure		kPa	100 ± 10

Table 1 - Sensor Details

Parameter	Description		
Probe	**Type**	**Min/ Max length**	**Materials**
	Rod	**0.4 m (1.3 ft) / 6.3m (20.7 ft)**	**316L, C-276* (UNS10276)**
	Wire	**1.0 m (3.3 ft) / 50m (164 ft)**	**316**
	Coax	**0.4 m (1.3 ft) / 6.3m (20.7 ft)**	**316L, C-276* (UNS10276)**

*Only for model SLG720

Table 2 - Minimum blocking distances and transition zones for the various probe types

Probe Type	Media in Tank	Minimum Blocking Distance High [cm]	Upper Transition Zone, T_{up} [cm]	Minimum Blocking Distance Low [cm]	Lower Transition Zone, T_{low} [cm]
Rod/Wire	Water (DC=80)	9	13	0	1
Rod/Wire	Oil (DC=2)	7	14	0	12
Coax	Water (DC=80)	5	14	2	0
Coax	Oil (DC=2)	5	8	6	7

Table 3 - Maximum measurement range versus Dielectric Constant

Wire Probe		Rod/Coax Probe	
Min DC	**Range (m)**	**Min DC**	**Range (m)**
1.4	**15**	**1.4**	**6.3**
1.8	**25**		
3	**42**		
4	**46**		
6	**50**		

Accuracy and measurement range detailed specification

The available probe lengths for each probe type are summarized in Table 1 - Sensor Details

These accuracy specifications are defined under reference conditions, at other ambient temperatures the accuracy specifications are increased by ± 0.2 mm/°C or ± 15 ppm/°C whichever is greater.

The measurement accuracy over the probe length is the larger of ±3 mm or ±0.03% of probe length. At the top and bottom of the probe the measurement performance can deviate from the ±3 mm or ±0.03% accuracy specification. The zones at the top and the bottom of the probe at which the accuracy deviates from the accuracy spec are called the upper and lower transition zone respectively. As the level rises or falls in the upper and lower transition zone a point may be reached where the transmitter cannot provide a level reading or the accuracy is worse than ±30 mm, at this point we have reached the minimum blocking distance that can be set in the transmitter.

Figures 4, 5, 6 & 7 summarize the accuracy as a function of length for the available probe types in addition Table 3-4 provides a tabular summary of the minimum blocking distances and the transition zones. In order to meet the accuracy specifications near the end of the probe (lower transition zone and minimum blocking distance low), the correct probe type and probe length need to be configured.

Note that for a wire probe with an end weight or with a looped end the minimum blocking distance low is measured from the top of the weight or the top of the loop's crimp.

When the transmitter is installed in a nozzle then the distances are measured from the bottom on the nozzle, i.e. where the nozzle transitions to the tank. In addition when using a nozzle the guidance provided in Nozzle mount section, later in this spec, must to be followed.

For the following four figures in this section, T_{up} and T_{low} are upper and lower transition zones respectively.

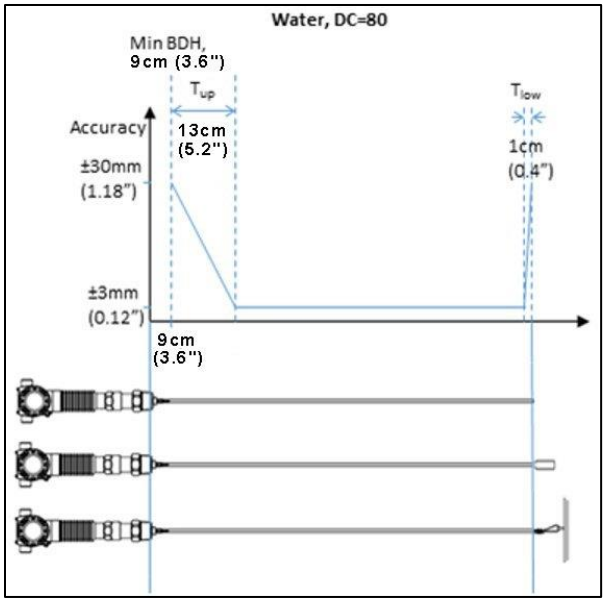

Figure 4 - Transition zone lengths and minimum blocking distance high (BDH) for single lead probes in water.

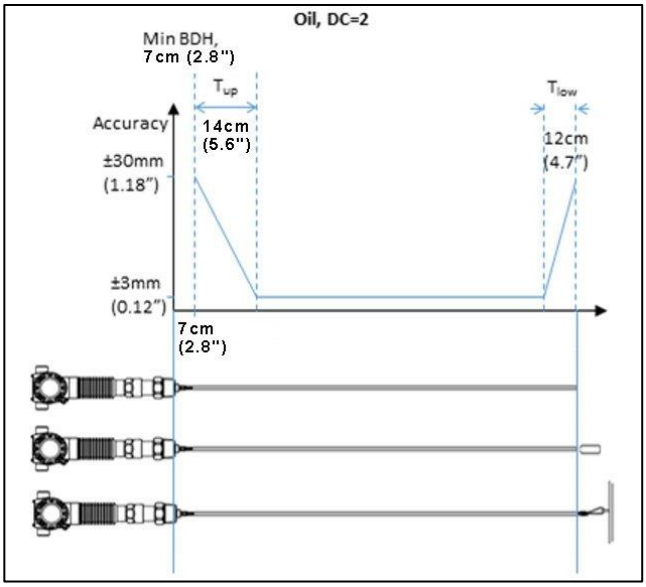

Figure 5 - Transition zone lengths and minimum blocking distance high (BDH) for single lead (i.e. rod and rope) probes in oil.

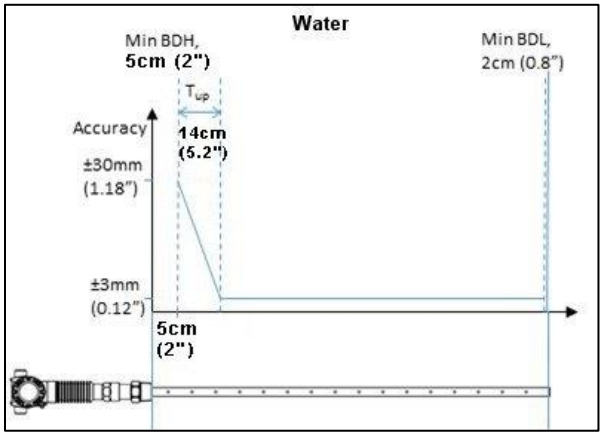

Figure 6 - Upper transition zone length and minimum blocking distance high (BDH) and minimum blocking distance low (BDL) for coax probes in water

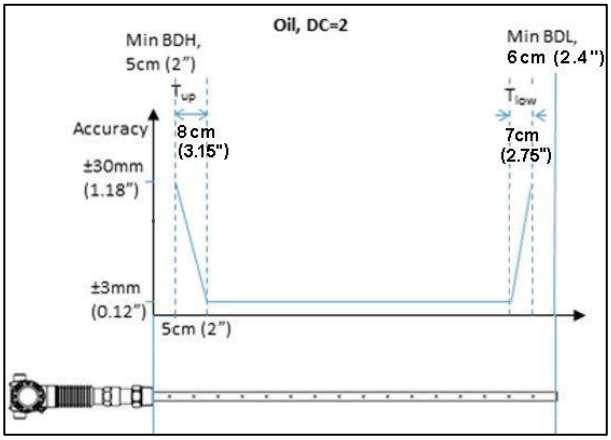

Figure 7 - Upper transition zone length and minimum blocking distance high (BDH) and minimum blocking distance low (BDL) for coax probes in oil.

Interface accuracy and range

When measuring interface the accuracy of both the surface and interface level is ±3 mm and the minimum interface thickness that can be measured is 7 cm. However, restrictions exist for interface measurements depending on the application and on the dielectric constant (DC) of the measured products:

1. Maximum dielectric constant of the upper medium: 9
2. Minimum dielectric constant of the lower medium: 10
3. Minimum difference in dielectric constant between the upper and lower medium: 8
4. Minimum upper product thickness: 7cm

In addition, the maximum upper product thickness that can be measured will be restricted by the measured products. In the case of low absorption by the upper medium, upper product thicknesses of greater than 30 m can be measured. In contrast, in strongly absorbing upper media, only upper product thicknesses of less than a couple of meters can be measured. In general, absorption will tend to be higher in media with higher dielectric constant. Therefore the measureable thickness range of the upper product will be lower with higher upper product dielectric constant applications (DCU >3 or 4).

When the upper product thickness drops below 15 cm approximately, the surface and interface reflections start to overlap. The transmitter will continue to measure the upper product thickness accurately down to 7 cm in spite of the fact that the echo curve might only show one reflection for both surface and interface. If the transmitter fails to measure upper product thicknesses below 15 cm or if the measurement of thin interfaces is inaccurate, it might be necessary to adjust the reflection models using the Honeywell DTM. Refer to the *SLG 700 HART® Option manual, #34-SL-25-06* or the *SLG 700 FOUNDATION™ Fieldbus Option Manual #34-SL-25-07* for details on adjusting model parameters.

Note: The level transmitter is designed to measure properly only when the upper product thickness is greater or equal to 7 cm. For example, upon restart the transmitter will not attempt to provide a surface and interface measurement if the upper product thickness is less than 7 cm.

Note: If the surface level is never going to exceed the minimum blocking distance high (min BDH) for the transmitter configuration, it is recommended to keep full tank detection option off.

Measurement in applications with Saturated Steam

High-Pressure Boiler Drum Level measurements with Saturated Steam Compensation

In high-pressure steam applications, the dielectric constant of the steam will change significantly with temperature and pressure[1]. At 172°C the measured distance to product will have an error of 1% if uncompensated. At 250°C the error will be 5%. Additionally, at high pressures, the dielectric constant of the liquid water is greatly reduced. Without compensation of these effects startup and operation of high-pressure steam boilers can be challenging.

Honeywell's approach is to continuously measure the dielectric constant of the steam using a Saturated Steam reference measurement and use this to calculate the correct boiler level.

[1] Down to 1.2 with End of Probe functionality

Pressure and Temperature Operation Ranges

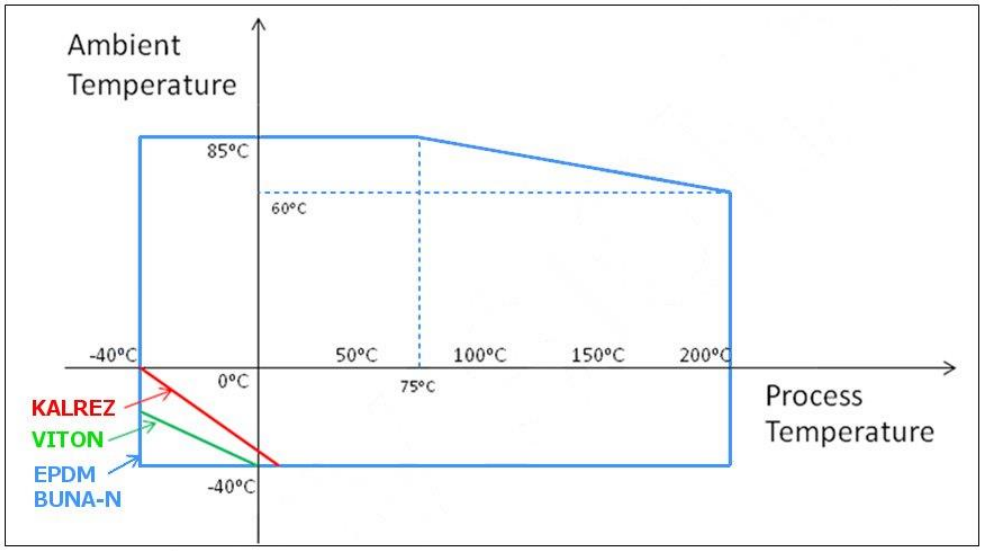

Figure 8 - Transmitter O-Ring Seal Material Temperature Applicability SLG720

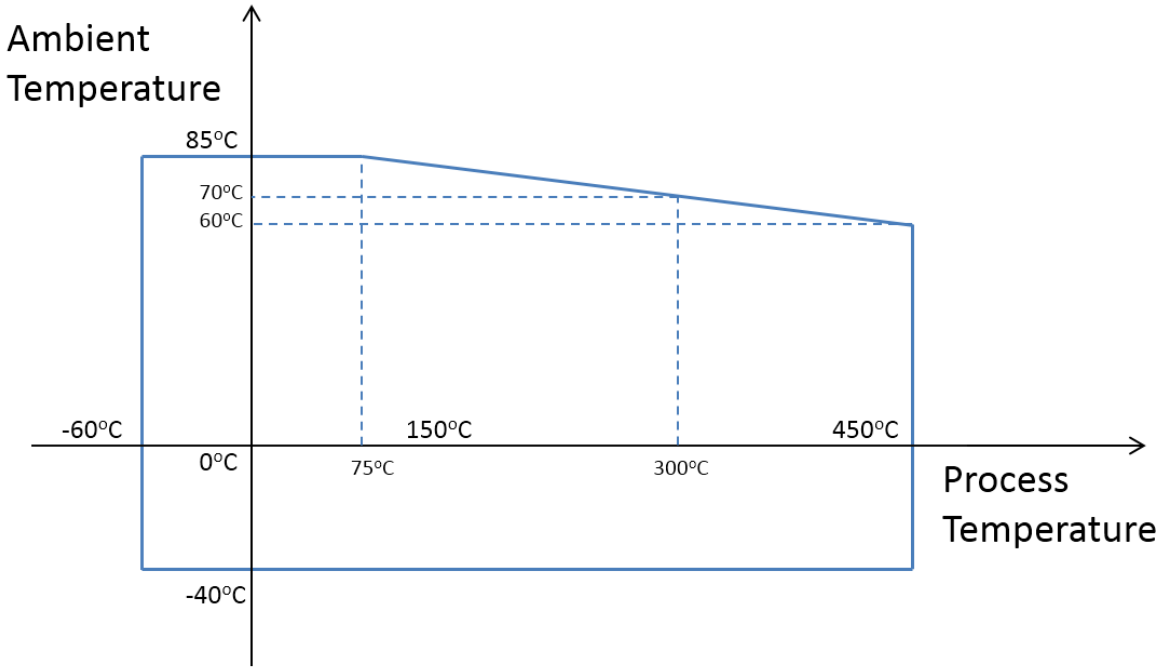

Figure 9 - SLG 726 Temperature Limits

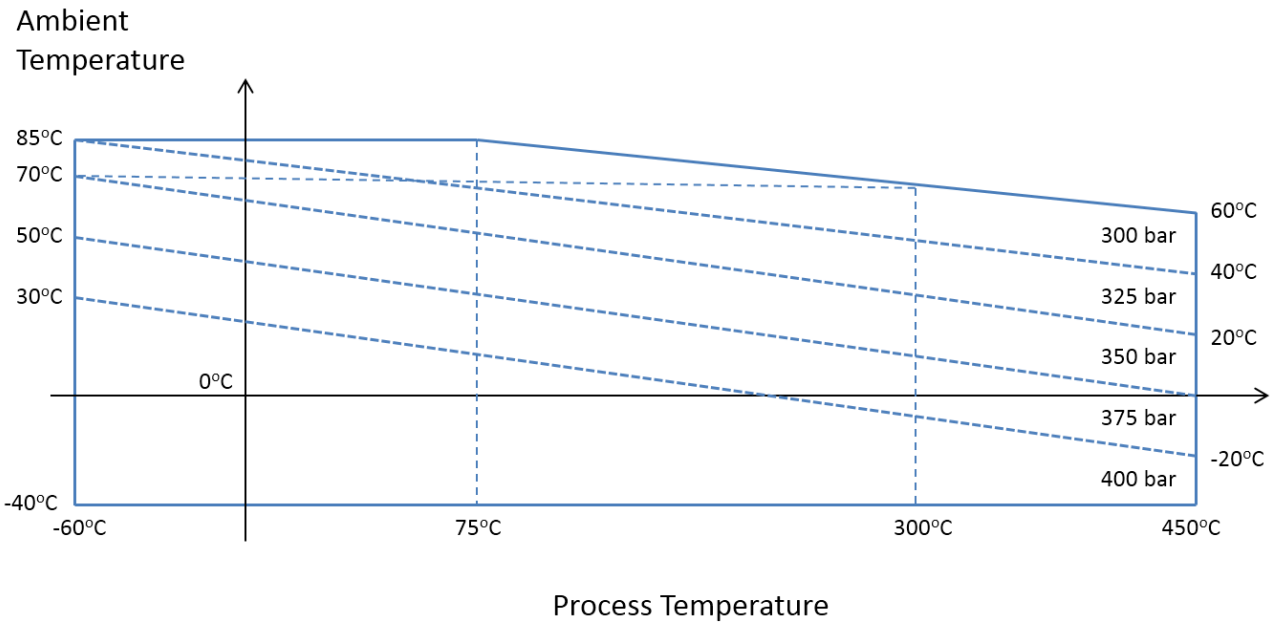

Figure 10 - SLG 726 Maximum Pressure based on Maximum Temperature

MAX PRESSURE [bar]		AMBIENT TEMPERATURE [°C]													
		-40	**-30**	**-20**	**-10**	**0**	**10**	**20**	**30**	**40**	**50**	**60**	**70**	**80**	**85**
PROCESS TEMPERATURE [°C]	**-60**	400	400	400	400	400	400	400	400	375	375	350	350	325	325
	-50	400	400	400	400	400	400	400	400	375	375	350	350	325	325
	0	400	400	400	400	400	400	400	375	375	350	350	325	325	300
	50	400	400	400	400	400	400	400	375	375	350	350	325	300	300
	100	400	400	400	400	400	400	375	375	350	350	325	325	300	-
	150	400	400	400	400	400	400	375	375	350	350	325	325	300	-
	200	400	400	400	400	400	375	375	350	350	325	325	300	-	-
	250	400	400	400	400	400	375	375	350	350	325	325	300	-	-
	300	400	400	400	400	375	375	350	350	325	325	300	300	-	-
	350	400	400	400	400	375	375	350	350	325	325	300	-	-	-
	400	400	400	400	375	375	350	350	325	325	300	300	-	-	-
	450	400	400	400	375	375	350	350	325	325	300	300	-	-	-
		INTRINSICALLY SAFE (IS)												NON-(IS)	

Figure 11 - SLG 726 Maximum pressure based on maximum operating temperature in tabular form

Communications Protocols & Diagnostics

HART® Protocol

Version: HART® 7

Power Supply

Voltage: 14.0 to 42.0 VDC at terminals

Load: Maximum 1284 ohms. See Operating Conditions – All Models table, Figure 3.

Minimum Load: 0 ohms. (For HART® communications a minimum load of 250 ohms is required)

FOUNDATION Fieldbus (FF)

Power Supply Requirements

Voltage: 9.0 to 32.0 VDC at terminals

Steady State Current: 19.6 mADC

Software Download Current: 29.4 mADC

Block Type	Qty	Execution Time
Resource	1P	NA/a
Level Transducer	1P	NA
Level Auxillary Transducer	1P	NA
Diagnostic	1P	NA
LCD Display	1P	NA
Analog Input	1P 5I	30 ms
PID w/Autotune	1P 1I	45 ms
Arithmetic	1P 1I	30 ms
Input Selector	1P 1I	30 ms

P = Permanent Block

I = Instantiable Block

All available function blocks adhere to FOUNDATION™ Fieldbus standards. PID blocks support ideal & robust PID algorithms with full implementation of Auto-tuning.

Link Active Scheduler

Transmitters can perform as a backup Link Active Scheduler and take over when the host is disconnected. Acting as a LAS, the device ensures scheduled data transfers typically used for the regular, cyclic transfer of control loop data between devices on the Fieldbus™.

Number of Devices/Segment

Entity IS model: 6 devices / segment

Schedule Entries

45 maximum schedule entries

50 maximum Links

Number of VCRs: 50 max

Compliance Testing: Tested according to ITK 6.1.2

Software Download

Utilizes Class-3 of the Common Software Download procedure as per FF-883 which allows the field devices of any manufacturer to receive software upgrades from any host.

Standard Diagnostics

SLG 700 series top level diagnostics are reported as either critical or non-critical and readable via DD or DTM tools or integral display.

Other Certification Options

See Approval Certifications Table for details on page 13.

Materials

- NACE MRO175, MRO103, ISO15156
- Hazardous Location certifications for Explosion Proof, Intrinsically Safe, Non-Incendive, Dust Ignition Proof, and FISCO:
  - CSA (Canada and USA, cCSAus)
  - FM
  - ATEX
  - IECEx
  - SAEx
  - NEPSI
  - CCoE
  - KOSHA
  - INMETRO
  - EAC TR-CU
- CE Mark and Pressure Equipment Directive (PED)
- Dual Seal in Accordance with ANSI/ISA-12.27.01
- Marked on FM and CSA approved units
- Overfill protection (WHG)
- CRN Registration
- SIL 2/3 Level Compliance
- Positive Material Identification (PMI)
- China Pattern Approval

Mounting recommendations

Suitable mounting position

To minimize signal interference, observe the minimum distances in Table 4. Examples of obstacles to avoid are protruding welds, internal installations, agitators, pipes and nozzles extending into the container, heating coils, inlet streams, ladders, etc. Metallic objects are a source of bigger interferences than non-metallic objects.

Turbulent applications may require the probe to be anchored to prevent it from contacting or getting too close to container walls or obstacles.

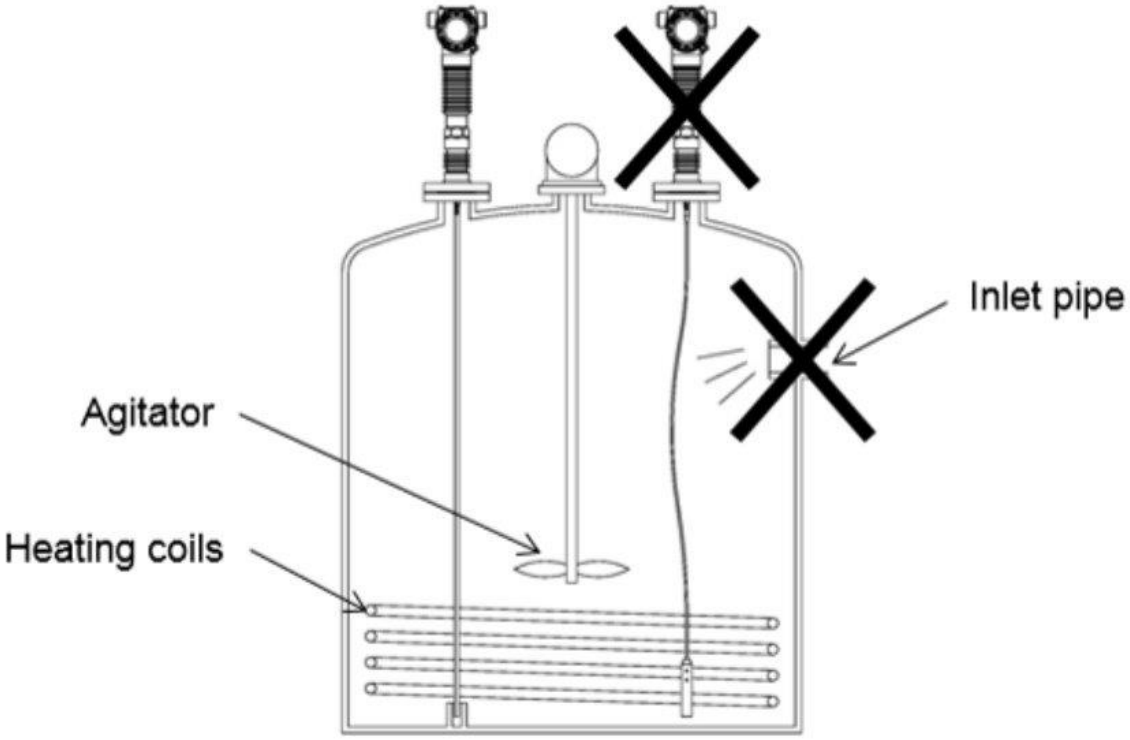

Figure 12 - Mounting position

Table 4 - Minimum recommended distance to container wall and obstacles (mm)

Probe	Minimum distance to obstacle	Minimum distance to smooth metallic container wall	Minimum distance to non-metallic container wall
Single wire	400 mm (16″)	100 mm (4″)	400 mm (16″)
Single rod	400 mm (16″)	100 mm (4″)	400 mm (16″)
Coax	0 mm (0″)	0 mm (0″)	0 mm (0″)

Nozzle mount

The transmitter can be mounted to a tank nozzle using the appropriate flange.

Table 5 shows recommended nozzle dimensions based on probe type.

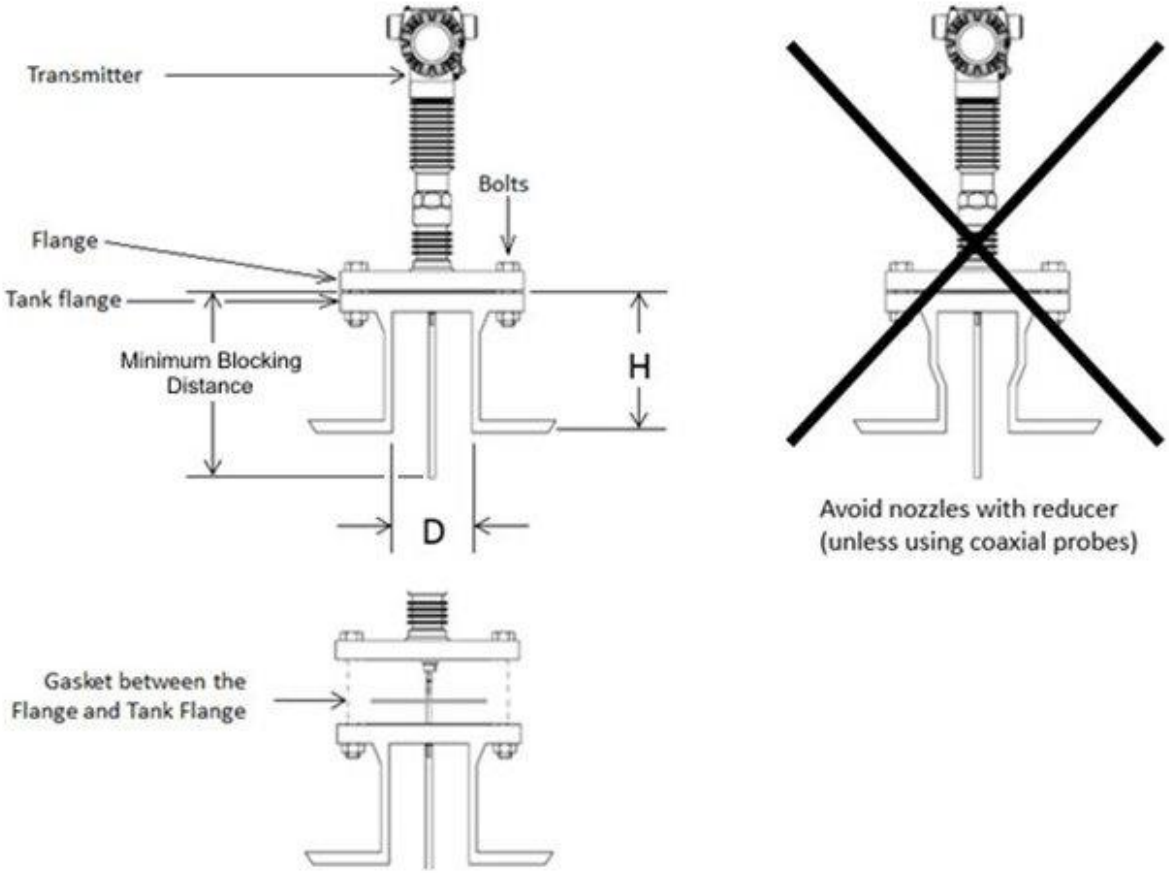

Figure 13 - Flange mounting

Table 5- SLG720: Recommended nozzle dimensions

	Single probe (rod/wire)	Coaxial probe
Recommended nozzle diameter (D)	150 mm (6")	> probe diameter
Minimum nozzle diameter (D)	50 mm (2")	> probe diameter
Recommended nozzle height (H)	100 mm (4") + nozzle diameter (*)	Not applicable
(*) When using a flexible probe in nozzles taller than 150mm (6") the SWB wire probe with extension stud is recommended. SWB is an option in the model selection guide. It offers a 300mm rod extension to keep the selection of the wire probe that is in the nozzle, from moving.		

In certain applications, taller nozzles may be accommodated but near zone performance at the exit of the nozzle may be reduced. For nozzle dimensions that do not meet the requirements outlined - contact the Honeywell Technical Assistance Centre. Refer to the back page for contact details.

For single lead probes, avoid nozzles > 200 mm (8") in diameter, particularly when measuring low dielectric constant materials. The user will need to install a smaller inner nozzle when operation with these larger nozzle diameters, see Figure 14 for inner nozzle design requirements.

For supported nozzles, the minimum upper blocking distance and transition zone distance must be increased by the height of the nozzle. Additionally, to achieve the minimum upper blocking distance as well as meet the accuracy specification in the upper transition zone, a field background must be performed.

Nozzle diameter > 8" (200 mm)

Where a nozzle greater than 8” diameter is the only installation option, use Figure 14 as a guideline.

1. Nozzle lower edge
2. Plate approximately flush with lower edge of the nozzle
3. Plate
4. Pipe diameter 150mm (6”). Where 1 = 8” diameter

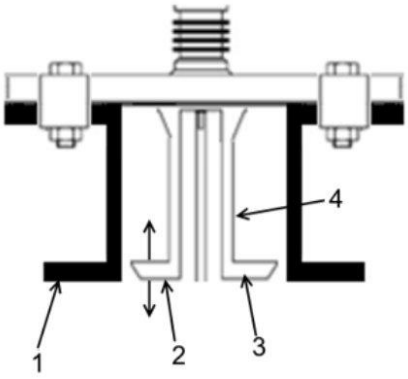

Figure 14 - Oversized nozzle configuration

Threaded mount

Transmitters with threaded process connectors can be screwed to tanks or nozzles with threaded bosses. For tanks with BSP/G threads, place a gasket on top of the tank, or use a sealant on the threads of the tank connection.

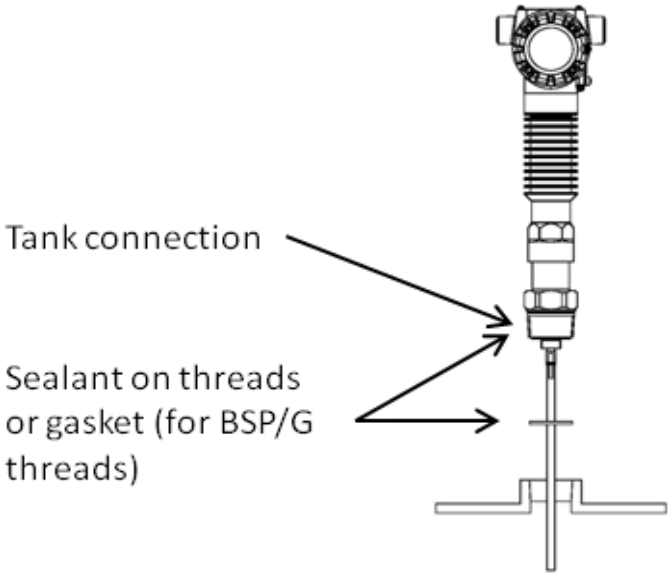

Figure 15 - Threaded tank connection

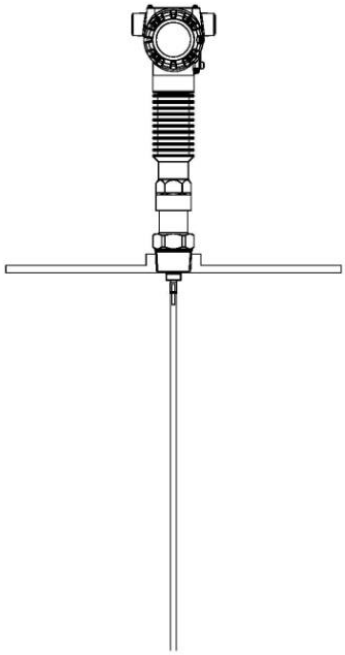

Figure 16 - Tank roof mounting using threaded connection

Mounting on a bypass / bridle

SLG 700 transmitter can be successfully installed in a new or existing bypass pipe, bridle, or a side pipe as shown in Figure 17. This type of installation is often simpler and allows the addition of radar level measurement to an otherwise busy installation.

A similar installation is also possible inside the main container, when installing the SLG 700 transmitter on a stilling well.

N = Inlet diameter

L = Effective measurement range (≥ 12“/300mm)

D = Bypass diameter (N<D)

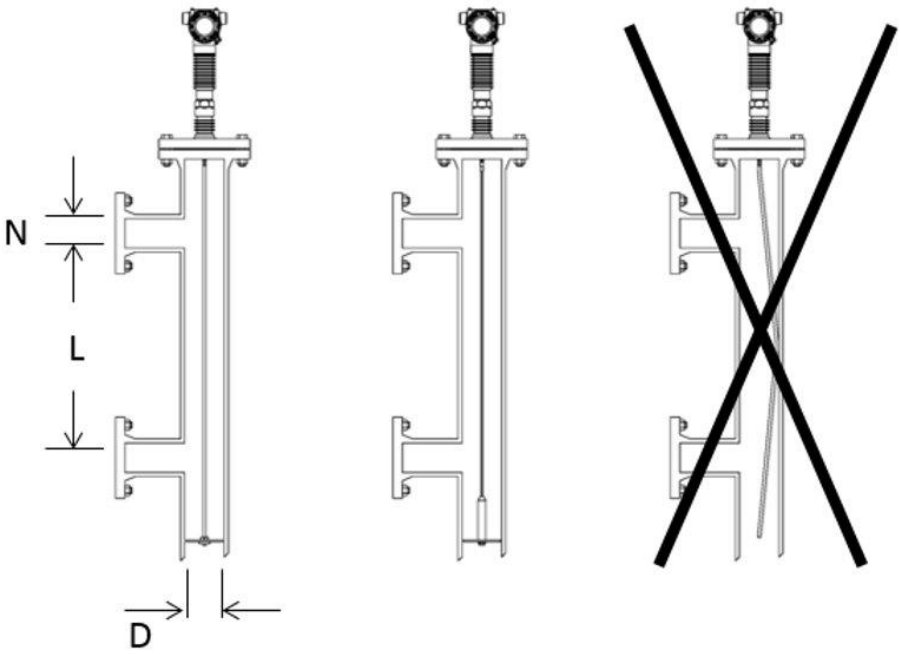

Figure 17 - Bypass installation

Table 6 - SLG720 bypass and stillwell recommended diameters

Probe type	Recommended diameter	Minimum diameter
Rod probe	3” or 4” (75 mm or 100 mm)	2” (50 mm)
Wire probe	4” (100 mm)	2” (50 mm)
Coaxial probe	NOT APPLICABLE	1.5” (37.5 mm)

Table 7 - SLG726 bypass and stillwell recommended diameters

Probe type	Recommended diameter	Minimum diameter
Rod probe	3” or 4” (75 mm or 100 mm)	2” (50 mm)
Wire probe	4” (100 mm)	2” (50 mm)
Coaxial probe	NOT APPLICABLE	2” (50 mm)

Chambers with smaller diameter can lead to problems with build-up. Chambers larger than 6" (150 mm) can be used, but offer little advantage for radar measurement.

The probe must extend the full length of the chamber and not contact the bottom of the chamber, or make contact with the chamber wall.

Clearance from the bottom of the chamber is recommended to be 1" (25 mm). Probe selection is dependent on length.

For lengths less than 20′ 8″ (6.3 m): Rod probe is recommended.

For lengths more than 20′ 8″ (6.3 m): Wire probe with weight and centering disk is recommended.
A centering disk is recommended for rigid probes over 1 m length to prevent excessive movement caused by strong currents inside the pipe.

Table 8: Centering Disk

Parameter	Description		
Centering Disk	Type	Min/ Max diameter	Materials
	Rod and Wire	5.08 cm (2 in) / 20.32 cm (8 in)	316L, C-276

Mounting of SLG726 instrument with Compensation for Saturated Steam

The saturated steam application is only available with rod or coax probes. Rod probes can only be used in a bypass between 2" and 4" diameter (50 to 100 mm). If the level gets closer than a given distance, the continuous DC measurement and correction will be turned off and the last good value will be used instead. This is the same range as where the upper inlet can be placed. The BDH and minimum range for correction are both dependent on the configuration and shown in Table 9 and illustrated in Figure 18 and Figure 18.

Note that for rod probes, a centering disk is required. The disk is mounted on the rod and therefore the effective length of the rod is reduced 1.79 cm (if drilling jig used).

- Inlets should not intrude into the pipe and joints should be welded as smoothly as possible.
- If flanged sections of pipe are being butted together to form a bypass the joint should be at least 10 cm away from the end of the VC rod (above or below). Care must be taken to ensure that any welds are as smooth as possible (on the inside).

Table 9: BDH and Minimum Distance to inlet or DC-corrected measurement.

Process connector type	Saturated Steam Ref Length (Ls)	Minimum BDH	Min dist to inlet or surface with DC-corrected measurement
Threaded	30 cm	47.0 cm	58.0 cm
	50 cm	67.0 cm	78.0 cm
Flanged	30 cm	44.5 cm	55.5 cm
	50 cm	64.5 cm	75.5 cm

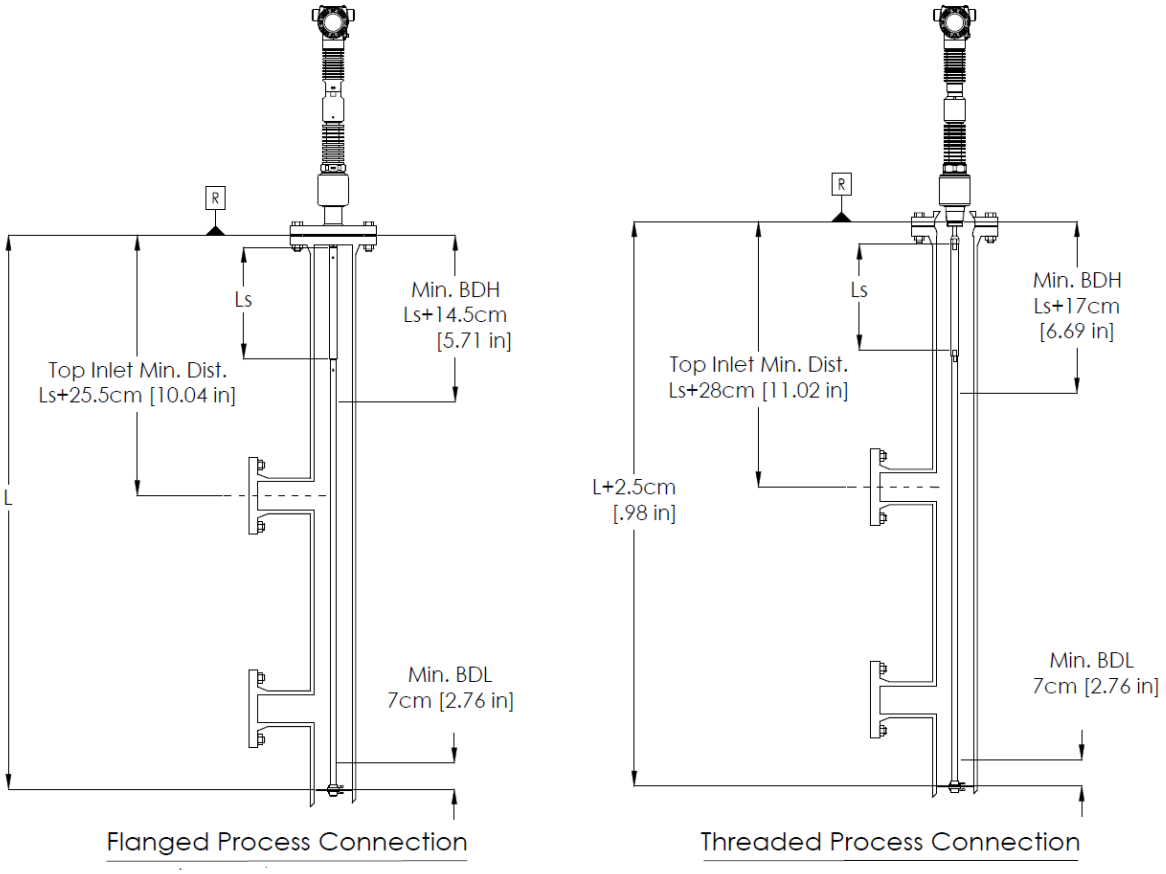

Figure 18 - SLG726 with compensation for saturated steam mounted on bypass

Mounting on a non-metallic container

To install a single lead probe into a non-metallic (plastic) vessel, the probe must be mounted with a metal flange (>2″/DN50) or if a threaded process connection is in use, the probe must be screwed into a metal sheet (diameter > 8″/200 mm).

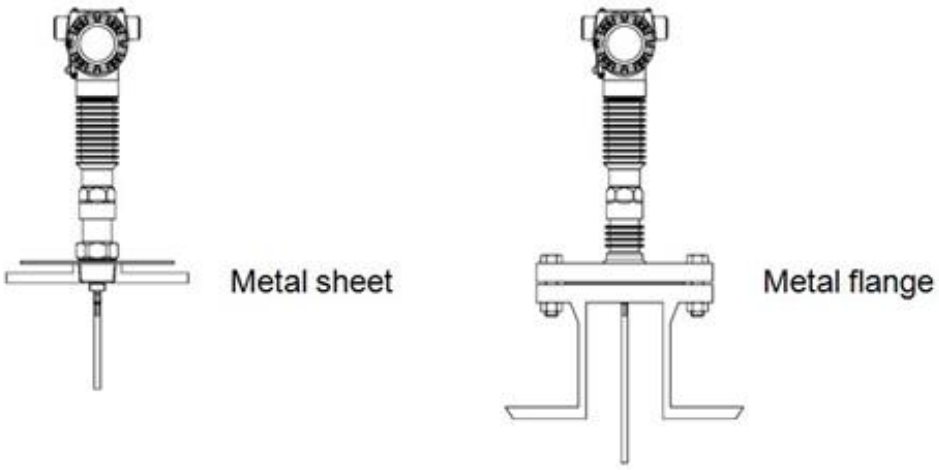

Figure 19 - Mounting on a non-metallic vessel

Figure 20 depicts an example of mounting in concrete silos, the placement of the concrete versus the metal sheet used to secure the transmitter. Both Figure 19 and Figure 20 are considered non-metallic mounts. Both types of mountings are subject to the same specifications.

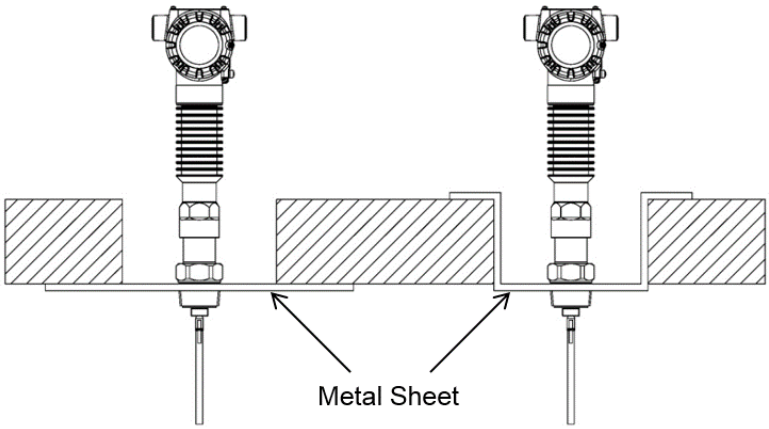

Figure 20 - Mounting in concrete silos

Approval Certifications:

AGENCY	TYPE OF PROTECTION	COMM	FIELD PARAMETERS
CSA cCSAus (Canada and USA) Certificate # 70016542	**Explosion Proof with intrinsically safe probe:** Class I, Division 1, Groups A, B, C, D; Class I, Zone 0/1 AEx d[ia] IIC T6..T5 Ga/Gb Ex d[ia] IIC T6..T5 Ga/Gb **Dust Ignition Proof:** Class II, III, Division 1, Groups E, F, G; T5 or T6 Class II Zone 21 AEx tb IIIC T95 ^{o}C DIP A21/II, III /1/EFG/Ex tb IIIC T95 ^{o}C	All	Note 1
	Intrinsically Safe: Class I, II, III, Division 1, Groups A, B, C, D, E, F, G; T4 Class 1 Zone 0 AEx ia IIC T4 Ga Ex ia IIC T4 Ga Class I Zone 2 AEx ic IIC T4 Gc Ex ic IIC T4 Gc	4-20 mA / HART	Note 2a
		FOUNDATION Fieldbus / FISCO	Note 2b/2c
	Non-incendive with intrinsically safe probe: Class I, Division 2, Groups A, B, C, D; T6..T5 Class I, Zone 0/2 AEx nA[ia] IIC T6..T5 Ga/Gc Ex nA[ia] IIC T6..T5 Ga/Gc	4-20 mA / HART	Note 1
		FOUNDATION Fieldbus / FISCO	Note 1
	Enclosure: Type 4X/ IP66/ IP67. Dual Seal in accordance with ANSI/ISA 12.27.01	All	All
Canadian Registration Number (CRN):		All SLG 700 models are registered in all provinces and territories in Canada.	

Approval Certifications: (Continued)

FM Approvals™ Certificate # FM16US0117X	**Explosion proof with intrinsically safe probe:** Class I Division 1, Groups A, B, C, D with Intrinsically safe probe Class 1, Zone 0/1 AEx ia/d IIC Ga/Gb T5..T6 **Dust Ignition Proof with intrinsically safe probe:** Class II, Division 1, Groups E, F, G, T5..T6 with Intrinsically Safe Probe Zone 21 AEx tb IIIC Db T95 ºC Probe : Zone 20 AEx ia IIIC Da T95 ºC	All	Note 1
	Intrinsically Safe: Class I, II, III, Division 1, Groups A, B, C, D, E, F, G, T4 Class I, Zone 0, AEx ia IIC T4 Ga Class I, Zone 2, AEx ic IIC T4 Gc	4-20 mA / HART	Note 2
		FOUNDATION Fieldbus / FISCO	Note 2
	Non-incendive with intrinsically safe probe: Class I, II, III, Division 2, Groups A, B, C, D, F, G, T5..T6 with Intrinsically Safe Probe Class I, Zone 2, AEx nA IIC T5..T6 Gc Class I, Zone 2[0], AEx nA[ia Ga] IIC T5..T6 Gc (Remote version only.)	4-20 mA / HART	Note 1
		FOUNDATION Fieldbus / FISCO	Note 1
	Enclosure: Type 4X/ IP66/ IP67. Dual Seal in accordance with ANSI/ISA 12.27.01	All	All

ATEX (EU) SIRA Certificate #s 15ATEX2004X 15ATEX4005X	**Flameproof with IS probe:** 2[1] G Ex db [ia] IIC T6..T5 Gb[Ga] **Dust Ignition Proof:** II 2D Ex tb IIIC T95ºC Db	All	Note 1
	Intrinsically Safe: II 1 G Ex ia IIC T4 Ga II 3[1] G Ex ic [ia] IIC T4 Gc[Ga]	4-20 mA / HART	Note 2a
		FOUNDATION Fieldbus / FISCO	Note 2b/2c
	Non-incendive with IS probe: 3[1] G Ex nA[ia] IIC T6..T5 Gc[Ga]	4-20 mA / HART	Note 1
		FOUNDATION Fieldbus / FISCO	Note 1
	Enclosure: IP66/ IP67	All	All
IECEx (World) Certificate # SIR 15.0005X	**Flameproof with IS probe:** Ex db[ia] IIC T6..T5 Gb[Ga] **Dust Ignition Proof:** Ex tb IIIC Db T95ºC	All	Note 1
	Intrinsically Safe: Ex ia IIC T4 Ga Ex ic [ia] IIC T4 Gc[Ga]	4-20 mA / HART	Note 2a
		FOUNDATION Fieldbus / FISCO	Note 2b/2c
	Non-incendive with IS probe: Ex nA[ia] IIC T6..T5 Gc[Ga]	4-20 mA / HART	Note 1
		FOUNDATION Fieldbus / FISCO	Note 1
	Enclosure: IP66/ IP67	All	All
CCoE (India) CCEs# P358814/1 **SAEx** (South Africa) Certificate # S-XPL/ 15.0528X **KOSHA** (Korea) Certificate #s 16-AV4BO-0093X 16-AV4BO-0094X 16-AV4BO-0095X 16-AV4BO-0161X 16-AV4BO-0165X 16-AV4BO-0167X	**Flameproof with IS probe:** Ex d[ia] IIC T4 Gb[Ga] **Dust Ignition Proof:** Ex tb IIIC T95ºC Ex tD A21 T95ºC (KOSHA)	All	Note 1
	Intrinsically Safe: Ex ia IIC T4 Ga	4-20 mA / HART	Note 2a
		FOUNDATION Fieldbus	Note 2b
	Non-incendive with IS probe: Ex nA[ia] IIC T4 Gc[Ga]	4-20 mA / HART	Note 1
		FOUNDATION Fieldbus	Note 1
	Enclosure: IP66/ IP67	All	All

NEPSI (China) Certificate # GYJ16.1279X	**Flameproof with IS probe:** Ex d ia IIC T4 Ga/Gb **Dust Ignition Proof:** Ex tb IIIC T95ºC	All	Note 1
	Intrinsically Safe: Ex ia IIC T4 Ga	4-20 mA / HART	Note 2a
		FOUNDATION Fieldbus	Note 2b
	Non-incendive with IS probe: Ex nA ia IIC T4 Ga/Gc	4-20 mA / HART	Note 1
		FOUNDATION Fieldbus	Note 1
	Enclosure: IP 66/67	All	All
INMETRO (Brazil) Certificate # IEx 16.0072X	**Flameproof with IS probe:** Ex d[ia Ga] IIC T4 Gb **Dust Ignition Proof:** Ex tb IIIC T95ºC Db	All	Note 1
	Intrinsically Safe: Ex ia IIC T4 Ga	4-20 mA / HART	Note 2a
		FOUNDATION Fieldbus	Note 2b
	Non-incendive with IS probe: Ex nA[ia Ga] IIC T4 Gc	4-20 mA / HART	Note 1
		FOUNDATION Fieldbus	Note 1
	Enclosure: IP 66/67	All	All
EAC **TR-CU** (Russia) Certificate # TC RU C-US. ГБ08.В.01747	**Flameproof with IS probe:** 1 Ex db [ia] IIC T4 X **Dust Ignition Proof:** Ex tb IIIC T95ºC X	All	Note 1
	Intrinsically Safe: 0 Ex ia IIC T4 X	4-20 mA / HART	Note 2a
		FOUNDATION Fieldbus	Note 2b
	Non-incendive with IS probe: 2 Ex nAc[ia] IIC T4 X	4-20 mA / HART	Note 1
		FOUNDATION Fieldbus	Note 1
	Enclosure: IP 66/67	All	All

Notes:

1. Non-Intrinsically Safe Operating Voltages:
   Voltage at terminals = 14.0 to 42.0 Vdc (HART / 4-20mA)
   = 9.0 to 32.0 Vdc (FOUNDATION Fieldbus)
2. Intrinsically Safe Entity Parameters

   a. Analog/ HART ia Entity Values:
   Vmax= Ui = 30 V Imax= Ii= 225 mA Ci = 4 nF Li = 0 Pi =1.1 W
   b. FOUNDATION Fieldbus- ia Entity Values
   Vmax= Ui = 30 V Imax= Ii= 225 mA Ci = 0 nF Li = 0 Pi =1.1 W
   c. FOUNDATION Fieldbus (FISCO)- Entity Values
   Vmax= Ui = 17.5 V Imax= Ii= 380 mA Ci = 0 nF Li = 0 Pi =5.32 W
   When Installed as FISCO Ta= -50C to 45C
   For ic entity, refer to the control drawing 50098941

3. For ambient and process temperature ranges and temperature classification, see SLG Transmitter User's manual

Overfill Protection	WHG Certificate #: Z-65.16-556. TÜV-tested and approved for overfill protection according to the German WHG regulations
SIL 2/3 Certification	IEC 61508 SIL 2 for non-redundant use and SIL 3 for redundant use according to EXIDA and TÜV Nord Sys Tec GmbH & Co. KG under the following standards: IEC61508-1: 2010; IEC 61508-2: 2010; IEC61508-3: 2010. **Note:** Only transmitters with SIL markings are certified for SIL applications. – Transmitters ordered with SIL certification will signify the SIL Level on the SLG 700 Nameplate.
China Pattern Approval	The SLG 700 is approved according to the Law on Metrology of the People's Republic of China. China Pattern Approval identification numbers 2016-L262, 2016-L263, and 2016-L264.
Korean KC MSIP Registration	SLG700 transmitters are registered under the clause 3, Article 58-2 of Radio Waves Act. Registration # MSIP-REI-Ssi-SLG720

Mounting & Dimensional Drawings

Reference Dimensions: millimeters / inches

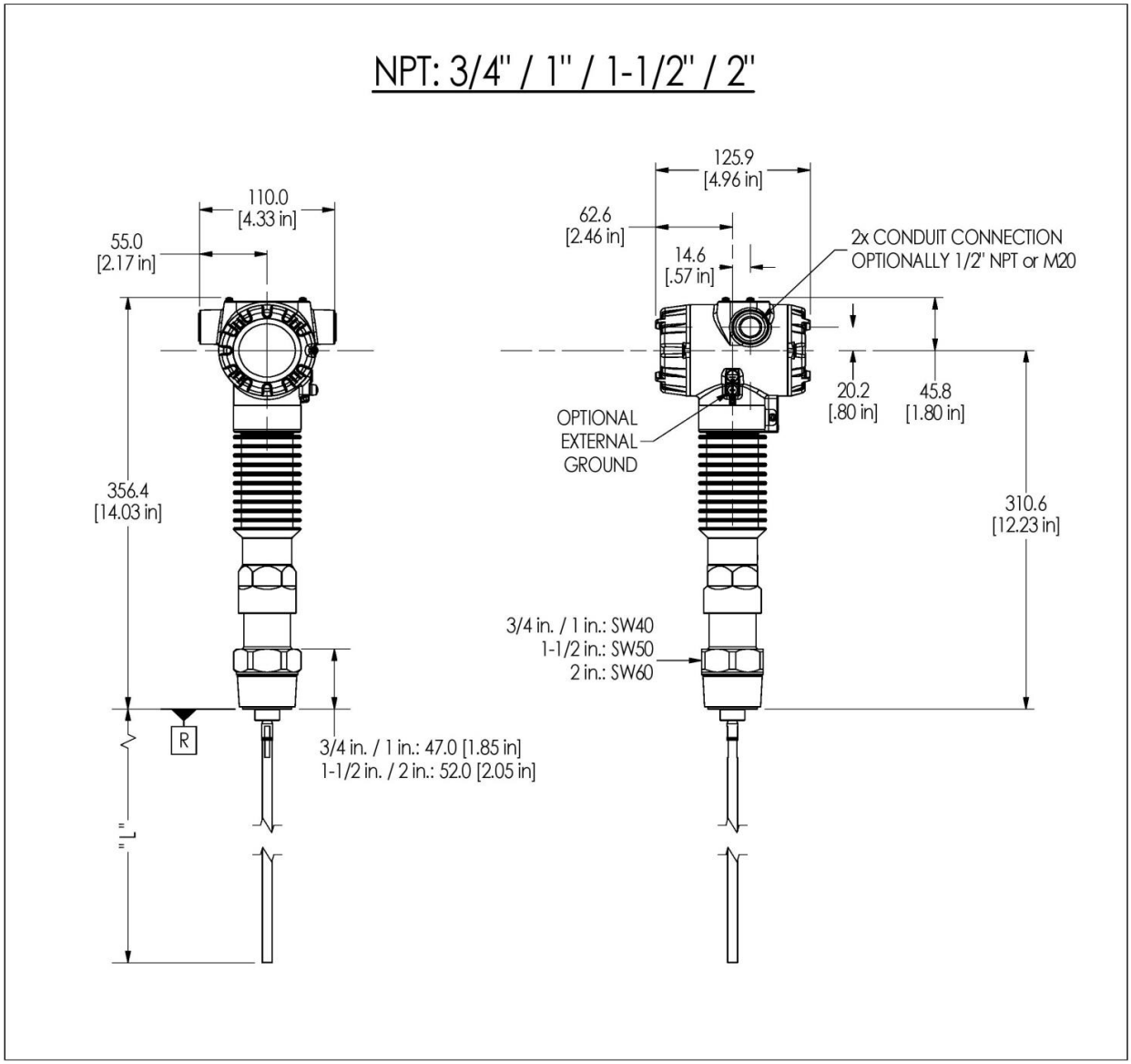

Figure 21 - SLG720 SmartLine Level with NPT fitting

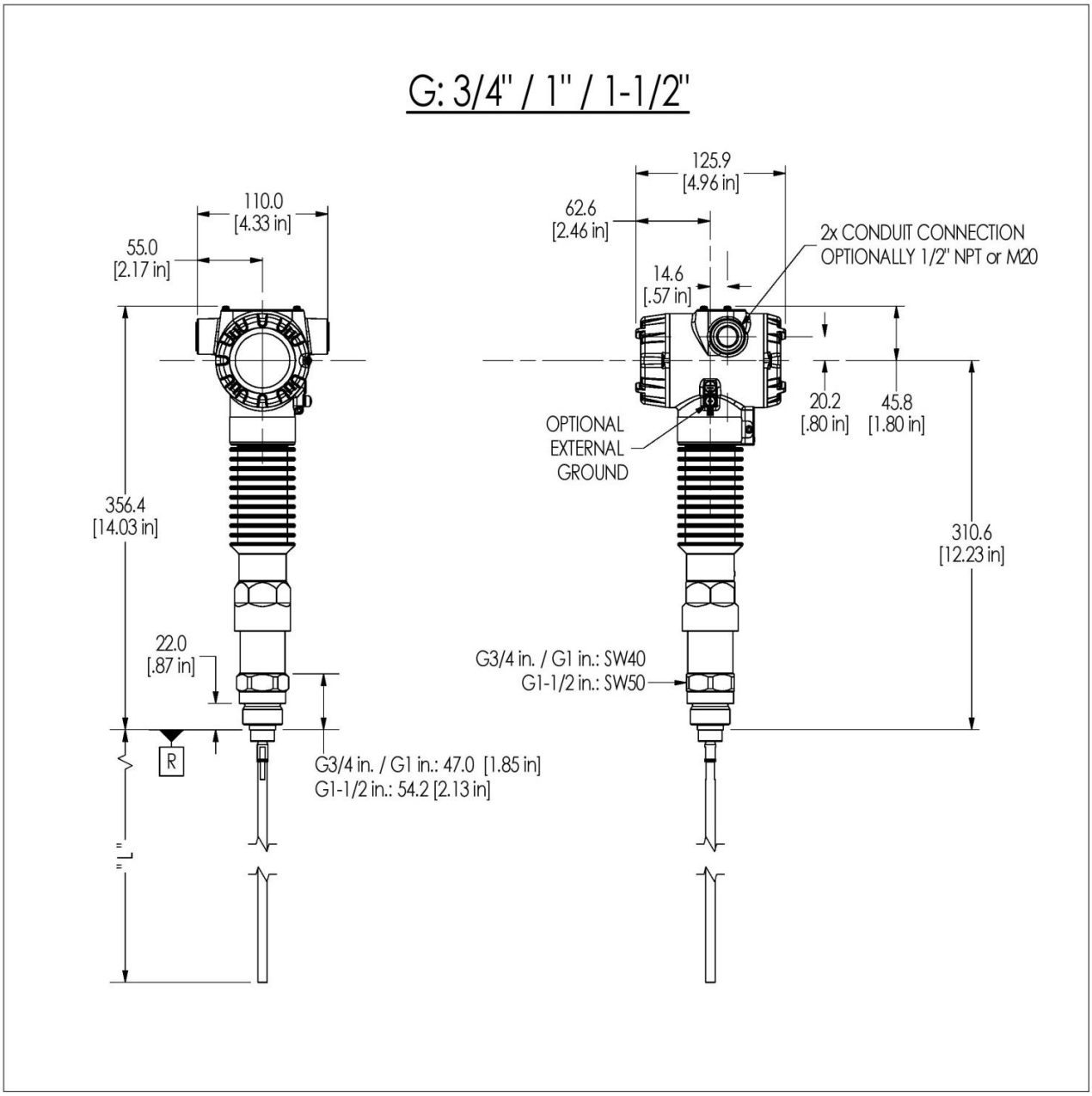

Figure 22 -SLG720 SmartLine Level with BSP (British Standard Pipe) fitting

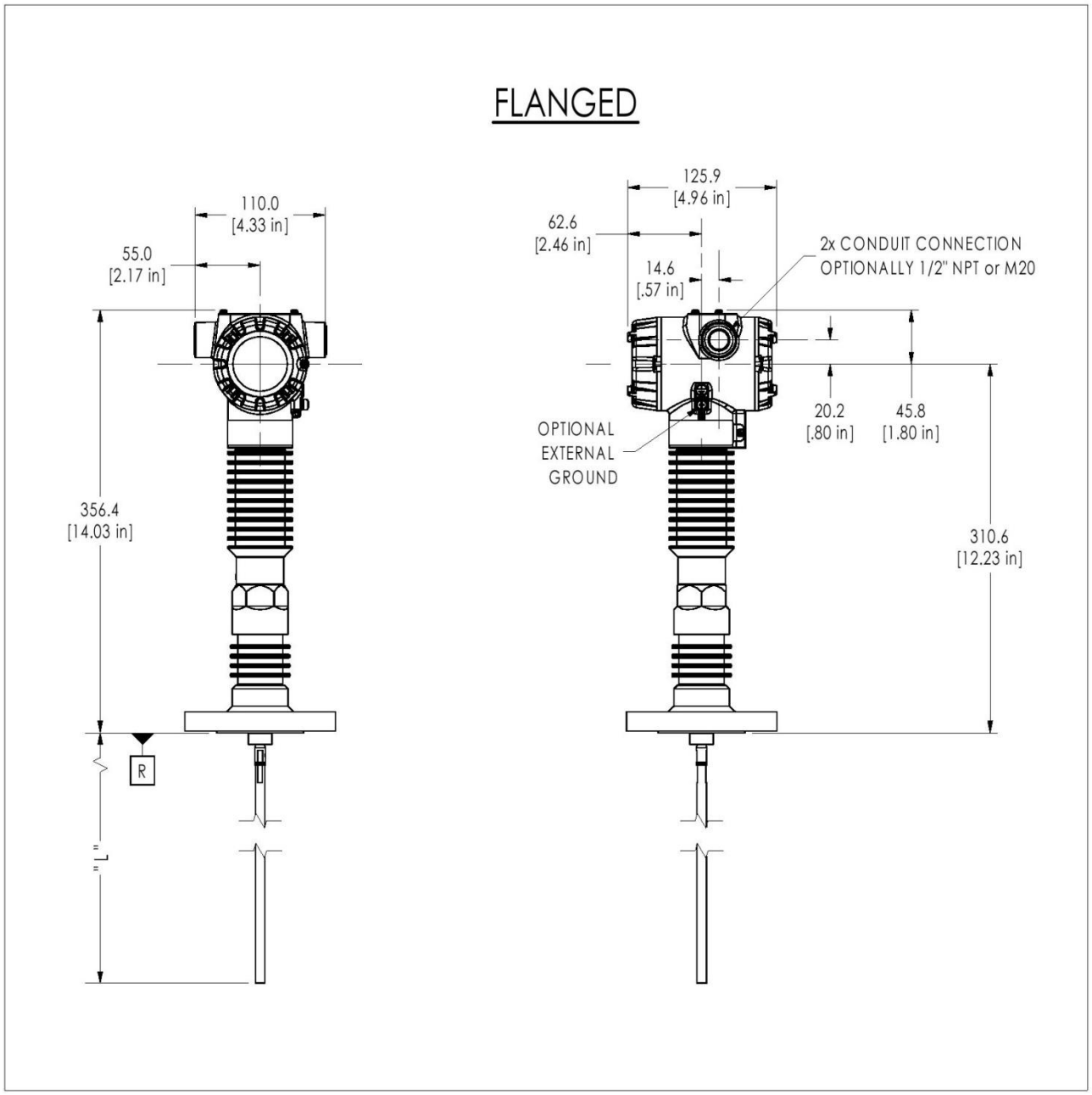

Figure 23 - SLG720 SmartLine Level with Flange

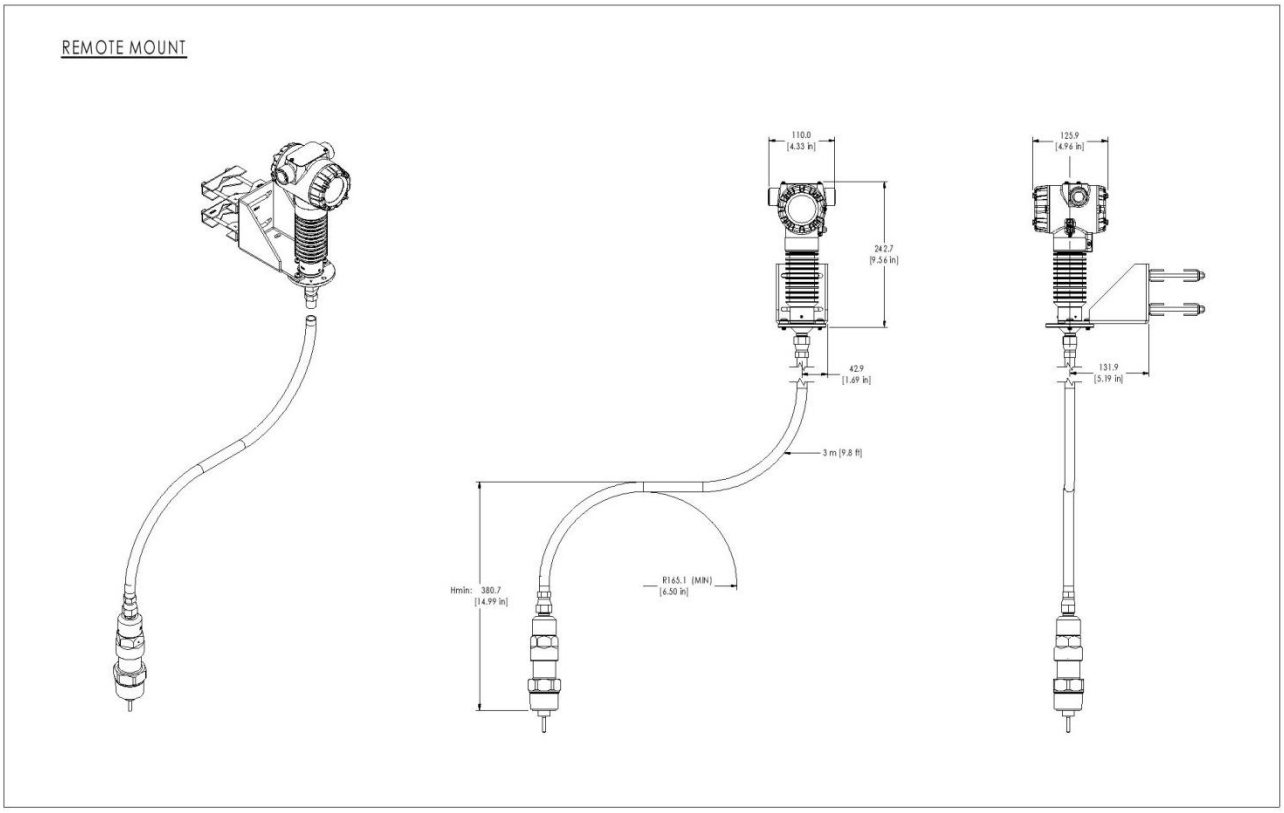

Figure 24 - SmartLine Level with remote housing option (Shown with SLG720)

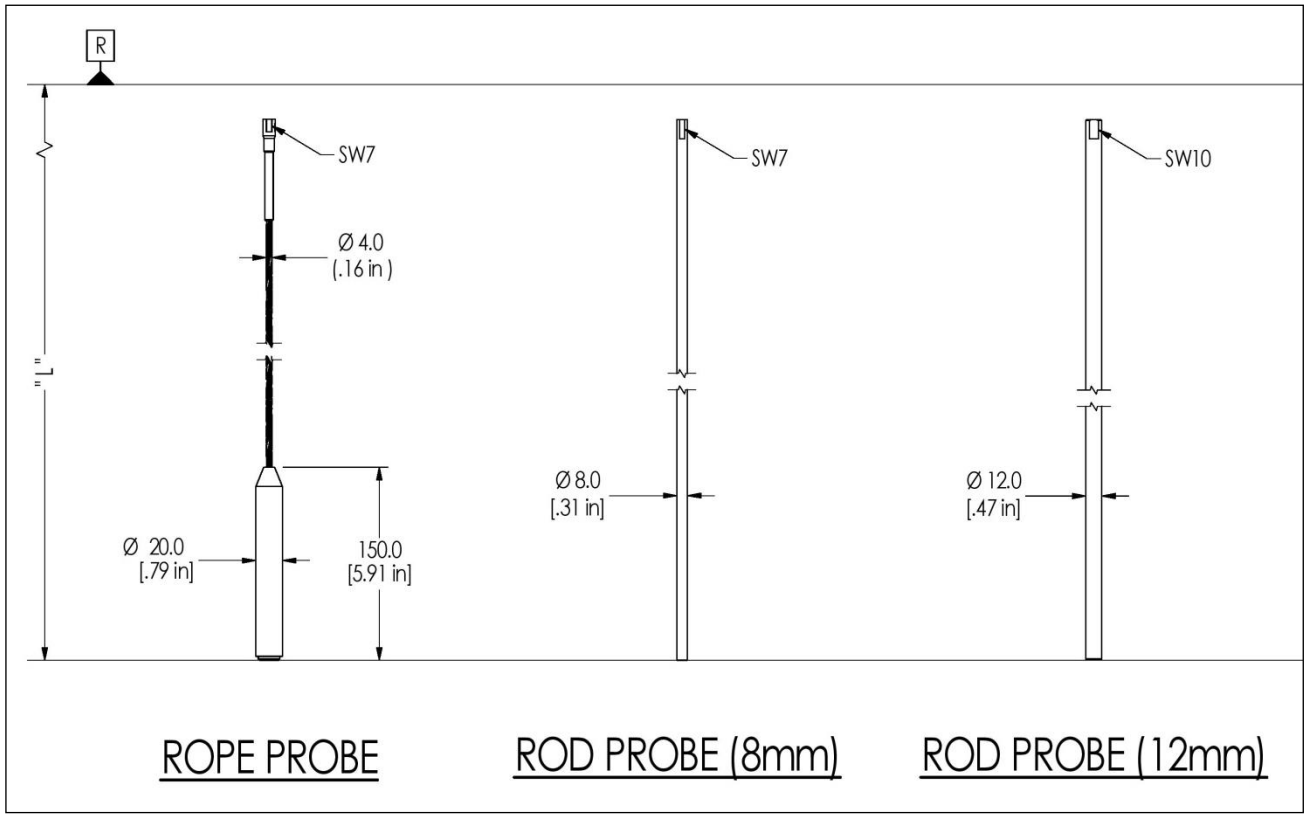

Figure 25 -SLG720 SmartLine Level rod probes

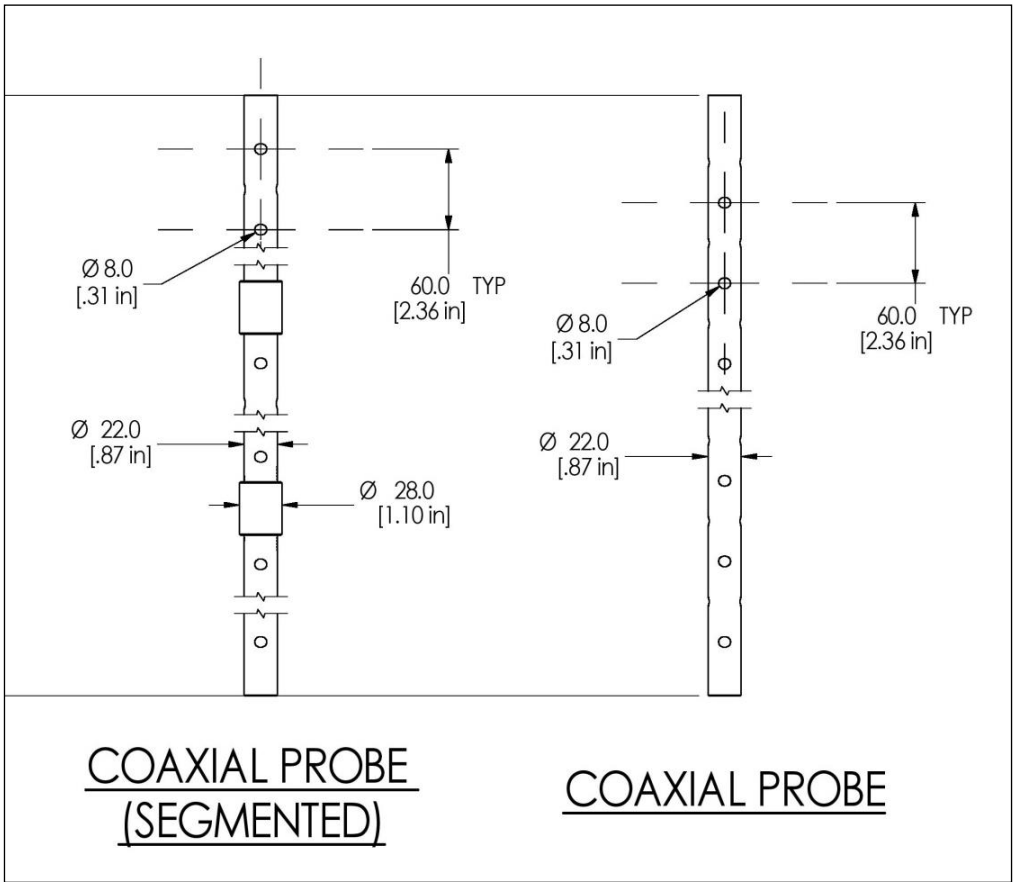

Figure 26 - SLG720 SmartLine Level coaxial probes

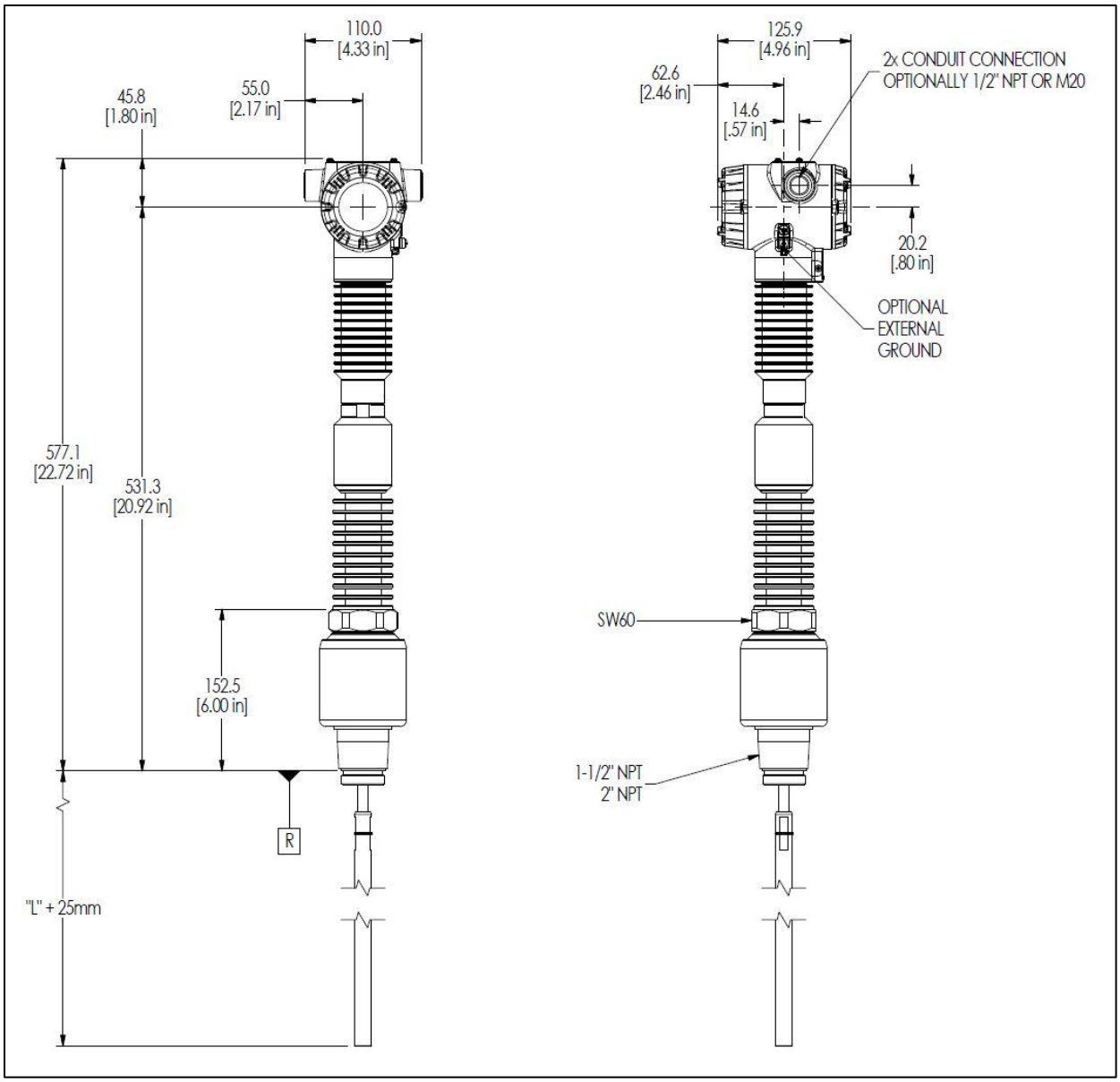

Figure 27 - SLG726 Threaded NPT Mount Transmitter

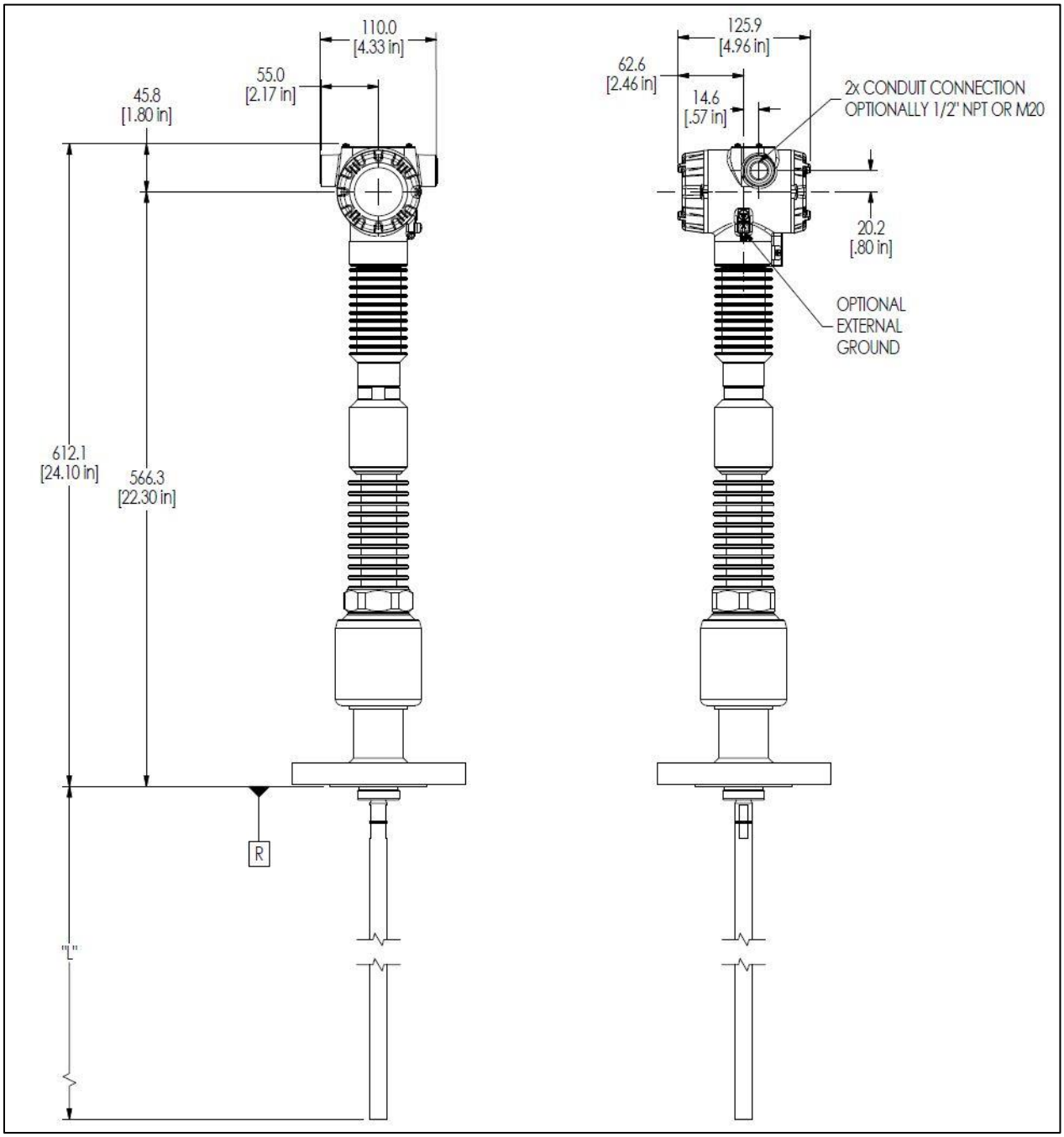

Figure 28 - SLG726 Flange Mount Transmitter

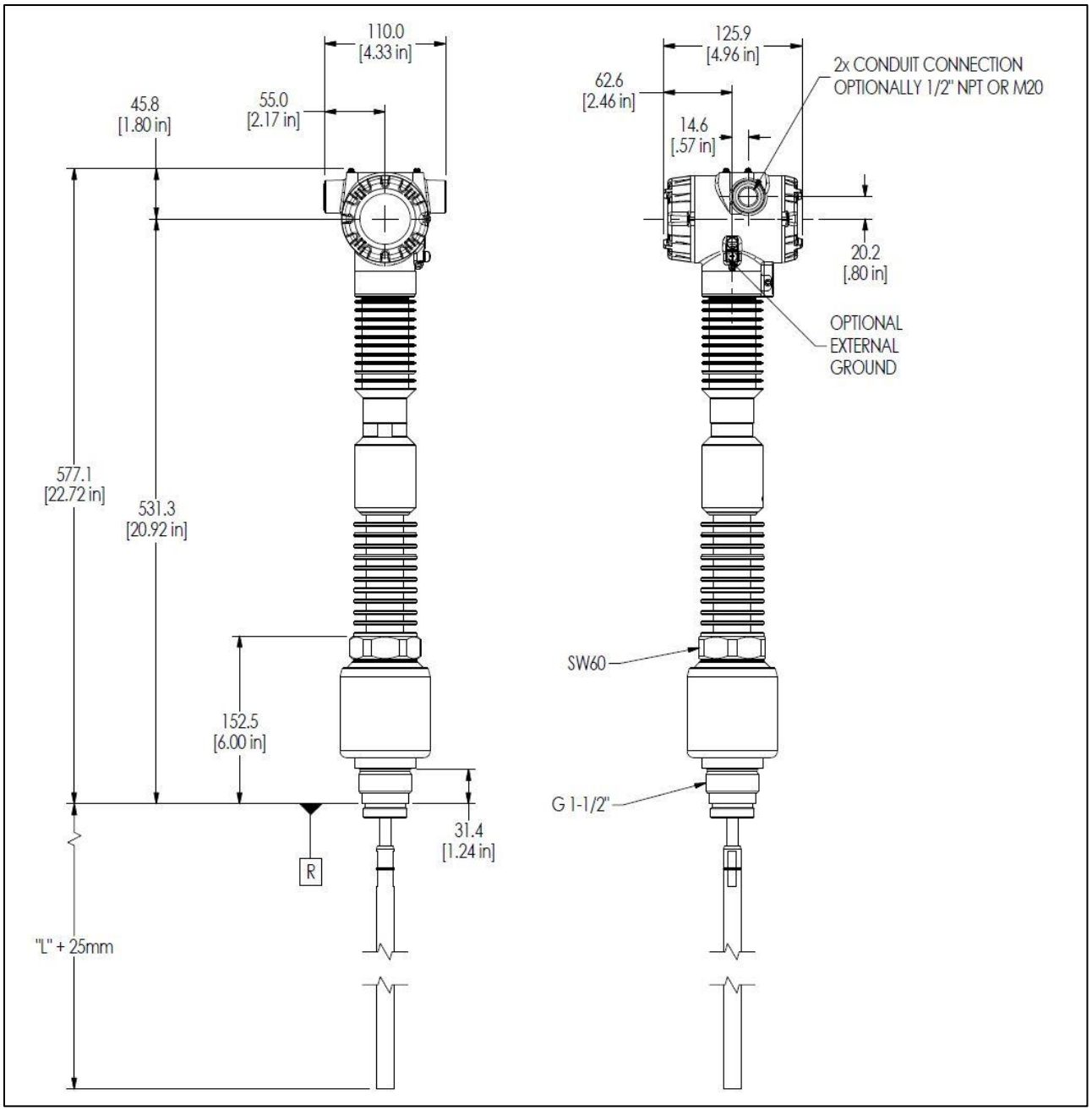

Figure 29 - SLG726 Threaded BSP/G Mount Transmitter

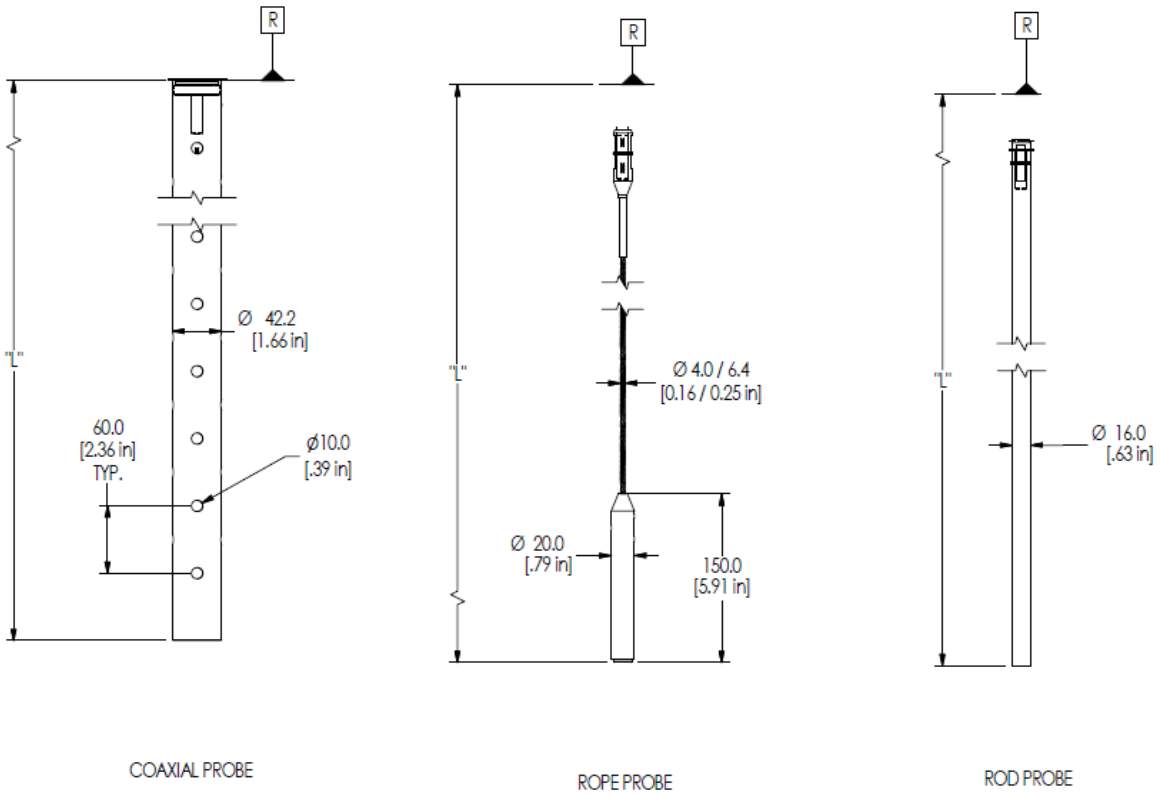

Figure 30 - SLG726 Probes

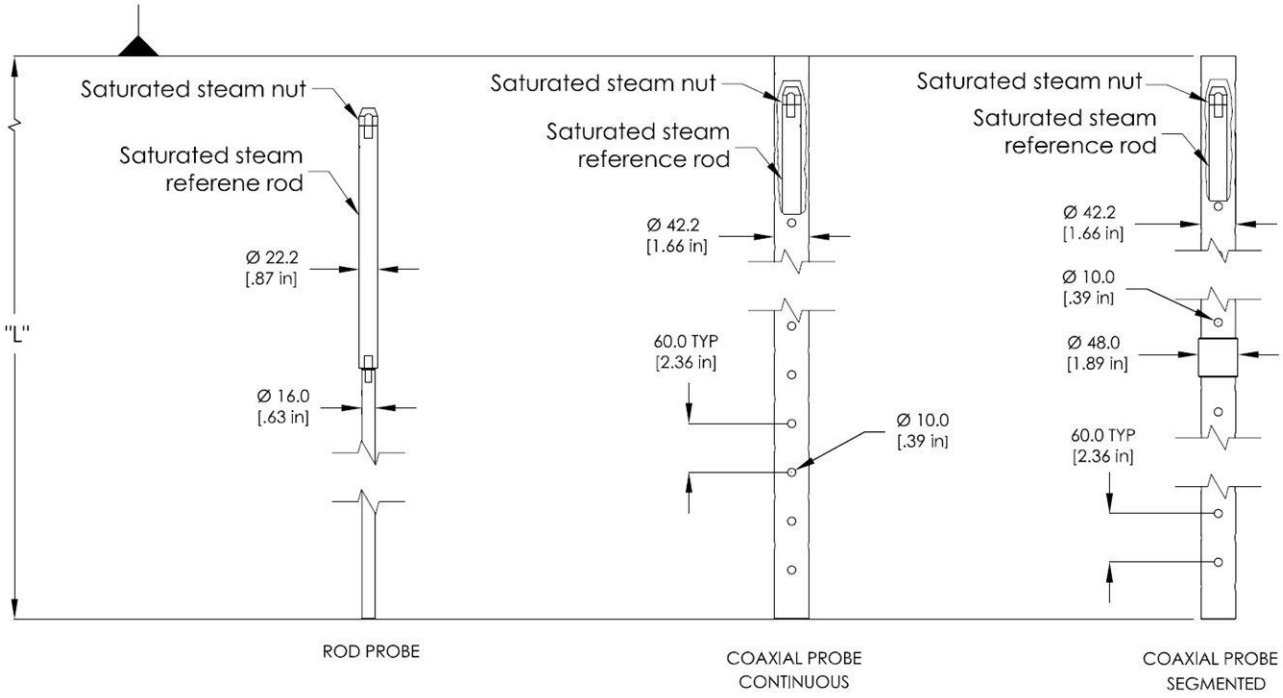

Figure 31 - SLG726 Saturated Steam probes

Figure 31 shows gas compensation probes. Please note for the rod probe, the first segment is thicker (22.2mm) than the second one (16mm).
The first thicker rod and the nut are the hardware for gas phase compensation.

Model Selection Guides are subject to change and are inserted into the specifications as guidance only.
Prior to specifying or ordering a model please check for the latest revision of the Model Selection Guides which are published at: **www.honeywellprocess.com/en-US/pages/default.aspx**

Model Selection Guide

Model SLG72X Series Liquid Measurement Guided Wave Radar Level Transmitter

Model Selection Guide

34-SL-16-01 Issue 10

Instructions

- Select the desired Key Number. The arrow to the right marks the selection available.
- Make one selection from each Table (I, II and IX) using the column below the proper arrow.
- A(•) denotes unrestricted availability. A letter denotes restricted availability.
- Restrictions follow Table IX.

Key Number	I	II	III	IV	V	VI	VII	VIII (Optional)	IX
SLG72 _	- _ _ _ _ _ _ _ _ _ _ _ _	- _ _ _ _	- _	- _ _ _	- _ _ _ _ _ _	- _	- _ _ _	- _ _ ' _ _	- _ _ _ _ _

KEY NUMBER	Application	Selection	Availability	
	Standard T/P Liquid Level Measurement (-40 to 200C/-1 to 40 bar)	SLG720	↓	
	High Temperature/High Pressure Liquid Level Measurement (-60 to 450C/-1 to 400 bar)	SLG726		↓

TABLE I	Probe and Material Selections				Selection		
	Probe Material	Measurement	Probe Type & Dia.	Min/Max Length Meters (Feet)			
			None - Customer Supplied (Single Rod and Wire Only)		0 0 0 _ _ _ _ _ _ _ _ _ _	•	•
a. Wetted materials and probe type	316/316L	General Liquids	Rod, Single 8 mm dia., segmented, 2000 mm segments	0.4m (1.3 ft) / 6.3m (20.7 ft)	SRA _ _ _ _ _ _ _ _ _ _	a	
			Rod, Single 12 mm dia., segmented, 2000 mm segments	0.4m (1.3 ft) / 6.3m (20.7 ft)	SRB _ _ _ _ _ _ _ _ _ _	a	
			Rod, Single 16 mm dia., segmented, 2000 mm segments	0.4m (1.3 ft) / 6.3m (20.7 ft)	SRC _ _ _ _ _ _ _ _ _ _		d
			Rod, segmented, 8 mm dia, 500 mm segments	0.4m (1.3 ft) / 6.3m (20.7 ft)	SRH _ _ _ _ _ _ _ _ _ _	a	
			Rod, segmented, 8 mm dia, 1000 mm segments	0.4m (1.3 ft) / 6.3m (20.7 ft)	SRJ _ _ _ _ _ _ _ _ _ _	a	
			Rod, segmented, 12 mm dia, 500 mm segments	0.4m (1.3 ft) / 6.3m (20.7 ft)	SRM _ _ _ _ _ _ _ _ _ _	a	
			Rod, segmented, 12 mm dia, 1000 mm segments	0.4m (1.3 ft) / 6.3m (20.7 ft)	SRN _ _ _ _ _ _ _ _ _ _	a	
			Rod, segmented, 16 mm dia, 500 mm segments	0.4m (1.3 ft) / 6.3m (20.7 ft)	SRK _ _ _ _ _ _ _ _ _ _		d
			Rod segmented, 16 mm dia, 1000 mm segments	0.4m (1.3 ft) / 6.3m (20.7 ft)	SRL _ _ _ _ _ _ _ _ _ _		d
			Wire, Single 4 mm dia	1.0m (3.3 ft) / 50m (164 ft)	SWA _ _ _ _ _ _ _ _ _ _	e	e
			Wire, Single 4 mm dia, max 300 mm nozzle height center rod	1.3m (4.3 ft) / 50m (164 ft)	SWB _ _ _ _ _ _ _ _ _ _	v	v
			Coaxial (22 mm OD), segmented, 2000 mm segments	0.4m (1.3 ft) / 6.3m (20.7 ft)	SCA _ _ _ _ _ _ _ _ _ _	h	
			Coaxial (42 mm OD), segmented, 2000 mm segments (see Note 3 below)	0.4m (1.3 ft) / 6.3m (20.7 ft)	SCB _ _ _ _ _ _ _ _ _ _		k
	Alloy C-276	Liquids	Rod, Single 8 mm dia., segmented, 2000 mm segments	0.4m (1.3 ft) / 6.3m (20.7 ft)	ARA _ _ _ _ _ _ _ _ _ _	l	
			Rod, segmented, 8 mm dia., 500 mm segments	0.4m (1.3 ft) / 6.3m (20.7 ft)	ARD _ _ _ _ _ _ _ _ _ _	l	
			Rod, segmented, 8 mm dia., 1000 mm segments	0.4m (1.3 ft) / 6.3m (20.7 ft)	ARE _ _ _ _ _ _ _ _ _ _	l	
			Coaxial (22 mm OD), 2000 mm segments	0.4m (1.3 ft) / 6.3m (20.7 ft)	ACA _ _ _ _ _ _ _ _ _ _	i	

			Selection	Availability	
			SLG720	↓	
			SLG726		↓
TABLE I *(con't)*	**Probe and Material Selections**		**Selection**	**20**	**26**
b. Probe End Treatment	**End Type**	None	___N_____	u	u
		Weight	___W_____	p	p
c. Centering Disk		None	____00_____	•	•
	316/316L	2" Centering Disk (see Note 2 below)	____S2_____	q	q
		3" Centering Disk (see Note 2 below)	____S3_____	q	q
		4" Centering Disk (see Note 2 below)	____S4_____	q	q
		6" Centering Disk (see Note 2 below)	____S6_____	q	q
		8" Centering Disk (see Note 2 below)	____S8_____	q	q
	Alloy C-276	2" Centering Disk (see Note 2 below)	____A2_____	y	
		3" Centering Disk (see Note 2 below)	____A3_____	y	
		4" Centering Disk (see Note 2 below)	____A4_____	y	
		6" Centering Disk (see Note 2 below)	____A6_____	y	
		8" Centering Disk (see Note 2 below)	____A8_____	y	
d. Seal material	Viton® or Fluorocarbon Elastomer (-26 to 200C)		______V_____	•	
	Kalrez perfluorelastomer (-20 to 200C; saturated steam max 150C)		______K_____	•	
	EPDM (-40 to 150C)		______E_____	•	
	Buna-N (-40 to 120C)		______B_____	•	
	Metallic - Alloy 718 NACE		______M_____		•
	Metallic - 17-4 PH		______N_____		•
e. Probe length units	Metric (millimeters)		_____M____	•	•
f. Probe length	400 mm to 50000 mm (in 100 mm increments)Probe length 00000 available only with table 1Aselection 000.		________XXXXX	•	•

Note: All flanges are 316L; when coated or C-276 wetted materials are selected a wetted material barrier is provided.
Note 2: A drilling jig needs to be ordered when ordering centering disk for rod probes. See accessory part numbers for drilling jig part.
Note 3: For transmitters with threaded process connections and probe lengths over 2000mm, probe will need to be assembled from within the tank.

					SLG720	↓	
					SLG726		↓
TABLE II	**Connection Types**	**Material**	**Size**	**Rating**	**Selection**	**20**	**26**
Process Connection	**Flanges ANSI B16.5 (CRN)**	**316/316L**	1-1/2"	Class 150lb RF	AS1A	•	
				Class 300lb RF	AS1B	•	
			2"	Class 150lb RF	AS2A	•	•
				Class 300lb RF	AS2B	•	•
				Class 600lb RF	AS2C		•
				Class 900lb RF	AS2D		•
				Class 1500lb RF	AS2H		•
				Class 600lb RTJ	AS2J		•
				Class 900lb RTJ	AS2K		•
				Class 1500lb RTJ	AS2L		•
			3"	Class 150lb RF	AS3A	•	•
				Class 300lb RF	AS3B	•	•
				Class 600lb RF	AS3C		•
				Class 900lb RF	AS3D		•
				Class 1500lb RF	AS3H		•
				Class 600lb RTJ	AS3J		•
				Class 900lb RTJ	AS3K		•
				Class 1500lb RTJ	AS3L		•
			4"	Class 150lb RF	AS4A	•	•
				Class 300lb RF	AS4B	•	•
				Class 600lb RF	AS4C		•
				Class 900lb RF	AS4D		•
				Class 1500lb RF	AS4H		•
				Class 600lb RTJ	AS4J		•
				Class 900lb RTJ	AS4K		•
				Class 1500lb RTJ	AS4L		•
			6"	Class 150lb RF	AS6A	•	•
			8"	Class 150lb RF	AS8A	•	•
		C-276	1-1/2"	Class 150lb RF	AC1A	•	
				Class 300lb RF	AC1B	•	
			2"	Class 150lb RF	AC2A	•	
				Class 300lb RF	AC2B	•	
			3"	Class 150lb RF	AC3A	•	
				Class 300lb RF	AC3B	•	

					SLG720 SLG726	↓	↓
Process Connection (continued)	**Flanges DIN EN 1092**	**316/316L**	DN40	DN40 PN10-40	DS4A	•	
			DN50	DN50 PN10/16	DS5A	•	•
				DN50 PN25/40	DS5B	•	•
				DN50 PN63	DS5H		•
				DN50 PN100	DS5J		•
				DN50 PN160	DS5K		•
				DN50 PN250	DS5L		•
			DN80	DN80 PN10/16	DS8A	•	•
				DN80 PN25/40	DS8B	•	•
				DN80 PN63	DS8H		•
				DN80 PN100	DS8J		•
				DN80 PN160	DS8K		•
				DN80 PN250	DS8L		•
			DN100	DN100 PN10/16	DS1A	•	•
				DN100 PN25/40	DS1B	•	•
				DN100 PN63	DS1H		•
				DN100 PN100	DS1J		•
				DN100 PN160	DS1K		•
				DN100 PN250	DS1L		•
			DN150	DN150 PN10/16	DS1Y	•	•
			DN200	DN200 PN16	DS2A	•	•
		C-276	DN40	DN40 PN10/40	DC4C	•	
			DN50	DN50 PN10/16	DC5A	•	
				DN50 PN25/40	DC5B	•	
			DN80	DN80 PN10/16	DC8A	•	
				DN80 PN25/40	DC8B	•	
			DN100	DN100 PN10/16	DC1A	•	
				DN100 PN25/40	DC1B	•	
	Flanges Special	**316/316L**	Fisher 249B/259B	600lb	FS1C	•	•
			Fisher 249C	600lb	FS1D	•	•
			Masoneilan 7-1/2"	600 psi	MS1C	•	•
	Threaded Fittings ISO228 and ANS	**316/316L**		3/4" NPT (CRN)	NS7A	•	
				1" NPT (CRN)	NS1A	•	
				1 - 1/2" NPT (CRN)	NS5A	•	•
				2" NPT (CRN)	NS2A	•	
				3/4" BSP (G 3/4")	GS7A	•	
				1" BSP (G 1")	GS1A	•	
				1-1/2" BSP/G 1-1/2	GS5A	•	•
		C-276		3/4" NPT (CRN)	NC7A	•	
				1" NPT (CRN)	NC1A	•	
				1 - 1/2" NPT (CRN)	NC5A	•	
				2" NPT (CRN)	NC2A	•	
				3/4" BSP (G 3/4")	GC7A	•	
				1" BSP (G 1")	GC1A	•	
				1-1/2" BSP/G 1-1/2	GC5A	•	

TABLE III	Agency Approvals (see data sheet for Approval Code Details)	SLG720 SLG726 Selection	SLG720 ↓ 20	SLG726 ↓ 26
Approvals	No Explosion Protection Approvals Required	0	•	•
	FM Explosion/Flame proof, Intrinsically Safe, Non-Incendive/Sparking, & Dust Ignition Proof	A	•	•
	CSA (Canada & USA) Explosion/Flame proof, Intrinsically Safe, Non-Incendive/Sparking, & Dust Ignition Proof	B	•	•
	ATEX Flameproof, Intrinsically Safe, Non-Sparking, & Dust Ignition Proof	C	•	•
	IECEx Flameproof, Intrinsically Safe, Non-Sparking, & Dust Ignition Proof	D	•	•
	SAEx Flameproof, Intrinsically Safe, Non-Sparking, & Dust Ignition Proof	E	•	•
	INMETRO Flameproof, Intrinsically Safe, Non-Sparking, & Dust Ignition Proof	F	•	•
	NEPSI Flameproof, Intrinsically Safe, Non-Sparking, & Dust Ignition Proof	G	•	•
	CCoE Flameproof, Intrinsically Safe, Non-Sparking, & Dust Ignition Proof	H	•	•
	KOSHA Flameproof, Intrinsically Safe, Non-Sparking, & Dust Ignition Proof	K	•	•
	EAC TR-CU Flameproof, Intrinsically Safe, Non-Sparking, & Dust Ignition Proof	L	•	•

TABLE IV	TRANSMITTER ELECTRONICS SELECTIONS			Selection		
	Material	Connection	Lightning Protection			
a. Electronic Housing Material & Connection Type	Polyester Powder Coated Aluminum	1/2 NPT	None	A_ _	•	•
	Polyester Powder Coated Aluminum	M20	None	B_ _	•	•
	Polyester Powder Coated Aluminum	1/2 NPT	Yes	C_ _	•	•
	Polyester Powder Coated Aluminum	M20	Yes	D_ _	•	•
	316 Stainless Steel (Grade CF8M)	1/2 NPT	None	E_ _	•	•
	316 Stainless Steel (Grade CF8M)	M20	None	F_ _	•	•
	316 Stainless Steel (Grade CF8M)	1/2 NPT	Yes	G_ _	•	•
	316 Stainless Steel (Grade CF8M)	M20	Yes	H_ _	•	•
	Remote 3m - Polyester Powder Coated Aluminum	1/2 NPT	None	J_ _	•	•
	Remote 3m - Polyester Powder Coated Aluminum	M20	None	K_ _	•	•
	Remote 3m - Polyester Powder Coated Aluminum	1/2 NPT	Yes	L_ _	•	•
	Remote 3m - Polyester Powder Coated Aluminum	M20	Yes	M_ _	•	•
	Remote 3m - 316 Stainless Steel (Grade CF8M)	1/2 NPT	None	N_ _	•	•
	Remote 3m - 316 Stainless Steel (Grade CF8M)	M20	None	P_ _	•	•
	Remote 3m - 316 Stainless Steel (Grade CF8M)	1/2 NPT	Yes	R_ _	•	•
	Remote 3m - 316 Stainless Steel (Grade CF8M)	M20	Yes	S_ _	•	•
b. Output/ Protocol	Analog Output		Digital Protocol			
	4-20mA dc		HART Protocol	_H_	•	•
	n/a		Foundation Fieldbus	_F_	•	•
c. Customer Interface Selections	Display	Ext Zero, Span & Config Buttons	Languages			
	None	None	None	_ _0	•	•
	None	Yes (Zero/Span Only)	None	_ _A	f	f
	Advanced	None	EN, DE, IT, FR, SP, RU, TU	_ _D	•	•
	Advanced	Yes	EN, DE, IT, FR, SP, RU, TU	_ _E	•	•
	Advanced	None	EN, CH, JP	_ _H	•	•
	Advanced	Yes	EN, CH, JP	_ _J	•	•

TABLE V	CONFIGURATION SELECTIONS			Selection	20	26
a. Diagnostics	Diagnostics					
	Standard Diagnostics			1_ _ _ _	•	•
b. Interface Measurement	Interface Options					
	None - Standard Level			_0_ _ _	•	•
	Interface Measurement			_1_ _ _	•	•
	Flooded Interface Measurement			_2_ _ _	•	•
c. Compensations	None			_ _0_ _	•	•
	Saturated Steam Application, 300mm Reference Reflector Length			_ _1_ _		w
	Saturated Steam Application, 500mm Reference Reflector Length			_ _2_ _		x
d. Output Limit, Failsafe & Write Protect Settings	Write Protect	Fail Mode	High & Low Output Limits [3]			
	Disabled	High> 21.0mAdc	Honeywell Std (3.8 - 20.8 mAdc)	_ _ _1_	f	f
	Disabled	Low< 3.6mAdc	Honeywell Std (3.8 - 20.8 mAdc)	_ _ _2_	f	f
	Enabled	High> 21.0mAdc	Honeywell Std (3.8 - 20.8 mAdc)	_ _ _3_	f	f
	Enabled	Low< 3.6mAdc	Honeywell Std (3.8 - 20.8 mAdc)	_ _ _4_	f	f
	Enabled	N/A	N/A Fieldbus or Profibus	_ _ _5_	g	g
	Disabled	N/A	N/A Fieldbus or Profibus	_ _ _6_	g	g
e. General Configuration	Factory Standard			_ _ _ _S	•	•
	Custom Configuration (Unit Data Required from customer)			_ _ _ _C	•	•

[3] NAMUR Output Limits 3.8 - 20.5mAdc can be configured by the customer.

				SLG720 SLG726	↓	↓
TABLE VI	**CALIBRATION & ACCURACY SELECTIONS**			**Selection**		
Accuracy and Calibration	**Accuracy**	**Calibrated Range**	**Calibration Qty**			
	Std Accuracy (+/-3mm or +/-0.03%)	Factory Std (uses RF cable calibrator)	Single Range	A	•	•
	Std Accuracy (+/-3mm or +/-0.03%)	Custom Cal. w/ certificate (Unit Data	Single Range	B	t	t

TABLE VII	**ACCESSORY SELECTIONS**	**Selection**		
a. Customer Tag	No customer tag	0 _ _	•	•
	One Wired Stainless Steel Tag (Up to 4 lines 26 char/line)	1 _ _	•	•
	Two Wired Stainless Steel Tag (Up to 4 lines 26 char/line)	2 _ _	•	•
b. Unassembled Conduit Plugs & Adapters	No Conduit Plugs or Adapters Required	_ A0	•	•
	1/2 NPT Male to 3/4 NPT Female 316 SS Certified Conduit Adapter	_ A2	n	n
	1/2 NPT 316 SS Certified Conduit Plug	_ A6	n	n
	M20 316 SS Certified Conduit Plug	_ A7	m	m
	Minifast® 4 pin (1/2 NPT)	_ A8	n	n
	Minifast® 4 pin (M20)	_ A9	m	m

TABLE VIII	**OTHER Certifications & Options: (String in sequence comma delimited (XX, XX, XX,....)**	**Selection**			
Certifications & Warranty	**None**	00	•	•	
	NACE MR0175; MR0103; ISO15156 Process wetted, pressure retaining parts only	FG	•	•	
	EN10204 Type 3.1 Material Traceability, pressure retaining parts	FX	•	•	
	Certificate of Conformance	F3	•	•	b
	Calibration Test Report & Certificate of Conformance	F1	•	•	
	Certificate of Origin	F5	•	•	
	FMEDA (SIL 2/3) Certification	FE	j	j	
	WHG Overfill Protection	WG	•	•	
	PMI Certification	PM	•	•	
	Extended Warranty Additional 1 year	01	•	•	
	Extended Warranty Additional 2 years	02	•	•	b
	Extended Warranty Additional 3 years	03	•	•	
	Extended Warranty Additional 4 years	04	•	•	

TABLE IX	**Manufacturing Specials**	**Selection**		
Factory	**Application and Validation Tool (AVT) Configuration File Reference #**	_ _ _ _ _	•	•
	Factory Default Configuration, No AVT File	00000	•	•

MODEL RESTRICTIONS

Restriction Letter	**Available Only with**		**Not Available with**	
	Table	**Selection(s)**	**Table**	**Selection(s)**
a	If	probe length 400 mm to 6300 mm (_ _ _ _ _ _ _ _ _ _ 400 to _ _ _ _ _ _ _ _ _ 6300)		
	II	_ S _ _		
b	**Select only one option from this group**			
c	If	probe length 400 mm to 6300 mm (_ _ _ _ _ _ _ _ _ _ 400 to _ _ _ _ _ _ _ _ _ 6300)	II	NS7A, NS1A, GS7A, GS1A
	II	_ S _ _		
d	If	probe length 400 mm to 6300 mm (_ _ _ _ _ _ _ _ _ _ 400 to _ _ _ _ _ _ _ _ _ 6300)		
	Vc	_ _ 0 _ _		
e	If	probe length 1000 mm to 50000 mm (_ _ _ _ _ _ _ _ _ 1000 to _ _ _ _ _ _ _ _ 50000)		
	II	_ S _ _		
f			IVb	_ F _
g	IVb	_ F _		
h	If	probe length 400 mm to 6300 mm (_ _ _ _ _ _ _ _ _ _ 400 to _ _ _ _ _ _ _ _ _ 6300)	II	NS7A, GS7A
			If	probe length > 2000 mm
	II	_ S _ _		

MODEL RESTRICTIONS

Restriction Letter	Available Only with		Not Available with	
	Table	Selection(s)	Table	Selection(s)
i	If	probe length 400 mm to 6300 mm (_ _ _ _ _ _ _ _ _ _ 400 to _ _ _ _ _ _ _ _ _ 6300)	II	NC7A, GC7A
			If	probe length > 2000 mm
	II	_ C _ _		
j	IVb	_ H _	Vd	_ _ _1 _, _ _ _2 _, _ _ _6 _
k	If	probe length 400 mm to 6300 mm (_ _ _ _ _ _ _ _ _ _ 400 to _ _ _ _ _ _ _ _ _ 6300)		
	Vc	_ _ 0 _ _	II	NS7A, NS1A, NS2A, GS1A, GS7A
l	If	probe length 400 mm to 6300 mm (_ _ _ _ _ _ _ _ _ _ 400 to _ _ _ _ _ _ _ _ _ 6300)		
	II	_ C _ _		
m	IVa	B_ _, D_ _, F_ _, H_ _, K_ _, M_ _		
n	IVa	A_ _, C_ _, E_ _, G_ _, J _, L _ _		
o	If	probe length 400 mm to 6300 mm (_ _ _ _ _ _ _ _ _ _ 400 to _ _ _ _ _ _ _ _ _ 6300)		
	II	_ P _ _		
p	Ia	SWA_ _ _ _ _ _ _ _ _ _, SWB_ _ _ _ _ _ _ _ _ _,		
q	1a,1b	SWAW _ _ _ _ _ _ _ _ _, SWBW _ _ _ _ _ _ _ _ _, SRA_ _ _ _ _ _ _ _ _ _, SRB_ _ _ _ _ _ _ _ _ _, SRH_ _ _ _ _ _ _ _ _ _, SRJ_ _ _ _ _ _ _ _ _ _, SRM_ _ _ _ _ _ _ _ _ _, SRN_ _ _ _ _ _ _ _ _ _, SRK_ _ _ _ _ _ _ _ _ _, SRL_ _ _ _ _ _ _ _ _ _, SRC_ _ _ _ _ _ _ _ _ _		
r	If	probe length 1000 mm to 50000 mm (_ _ _ _ _ _ _ _ _ 1000 to _ _ _ _ _ _ _ _ _ 50000)	II	NS7A, NS1A, GS7A, GS1A
	II	_ S_ _		
s	If	probe length 1000 mm to 35000 mm (_ _ _ _ _ _ _ _ _ 1000 to _ _ _ _ _ _ _ _ _ 35000)		
	II	_ P_ _		
t			Ia	SWA_ _ _ _ _ _ _ _ _ _, SWB_ _ _ _ _ _ _ _ _ _
			If	probe lengths more than 20 meters (>_ _ _ _ _ _ _ _ 20000)
u			Ia	SWA_ _ _ _ _ _ _ _ _ _, SWB_ _ _ _ _ _ _ _ _ _,

MODEL RESTRICTIONS

Restriction Letter	Available Only with		Not Available with	
	Table	Selection(s)	Table	Selection(s)
v	If	probe length 1300 mm to 50000 mm (_ _ _ _ _ _ _ _ _ 1300 to _ _ _ _ _ _ _ _ 50000)		
	II	_ S _ _		
w	If	probe length 900 mm to 6300 mm (_ _ _ _ _ _ _ _ _ 900 to _ _ _ _ _ _ _ _ 6300)	IVb	_ F _
	1a	SRC_ _ _ _ _ _ _ _ _ _, SRK_ _ _ _ _ _ _ _ _ _, SRL_ _ _ _ _ _ _ _ _ _, SCB_ _ _ _ _ _ _ _ _ _		
x	If	probe length 1100 mm to 6300 mm (_ _ _ _ _ _ _ _ _ 1100 to _ _ _ _ _ _ _ _ 6300)	IVb	_ F _
	1a	SRC_ _ _ _ _ _ _ _ _ _, SRK_ _ _ _ _ _ _ _ _ _, SRL_ _ _ _ _ _ _ _ _ _, SCB_ _ _ _ _ _ _ _ _ _		
y	1a	ARA_ _ _ _ _ _ _ _ _ _, ARD_ _ _ _ _ _ _ _ _ _, ARE_ _ _ _ _ _ _ _ _ _		
z	1a	PRA_ _ _ _ _ _ _ _ _ _, PWA_ _ _ _ _ _ _ _ _ _, PWB_ _ _ _ _ _ _ _ _ _		

HART® is a registered trademark of HART Communication Foundation.
FOUNDATION™ Fieldbus is a trademark of Fieldbus Foundation.
Viton® is a registered trademark of DuPont Performance Elastomers.
Teflon® is a registered trademark of DuPont.
FM Approvals℠ is a service mark of FM Global

ACCESSORIES

Description	Part Number
SmartLine Anytime Tool (for firmware upgrade)	50127238-501
SmartLine Level Drilling Jig for Rod Probes, reusable	51000000-502

FIELD INSTALLABLE REPLACEMENT PARTS

Description	Kit Number
GWR Level Basic Display Kit	50096657-501
GWR Level Advanced Display Kit	50096657-502
GWR Level Terminal Module w/Lightning Protection Kit for HART Modules	50095191-502
GWR Level Terminal Module w/Lightning Protection Kit for FF Modules	50095191-510
GWR Level Terminal Module w/o Lightning Protection Kit for HART Modules	50095191-501
GWR Level Terminal Module w/o Lightning Protection Kit for FF Modules	50095191-509
GWR Level HART Electronics module w/o connection for external configuration button	50096656-501
GWR Level HART Electronics module w/connection for external configuration button	50096656-502
GWR Level FF Electronics module w/o connection for external configuration button	50096656-503
GWR Level FF Electronics module w/connection for external configuration button	50096656-504
GWR Level Spare Sensor Electronics Housing	50096711-501
GWR Level Pay for Play Saturated Steam Application 0.3m	50135319-501
GWR Level Pay for Play Saturated Steam Application 0.5m	50135319-502
GWR Level Pay for Play Interface Application	50135320-501
GWR Level Pay for Play End Of Probe Application	50135321-501

Sales and Service

For application assistance, current specifications, pricing, or name of the nearest Authorized Distributor, contact one of the offices below.

ASIA PACIFIC

Honeywell Process Solutions,
(TAC) **hfs-tac-support@honeywell.com**

Australia
Honeywell Limited
Phone: +(61) 7-3846 1255
FAX: +(61) 7-3840 6481
Toll Free 1300-36-39-36
Toll Free Fax:
1300-36-04-70

China – PRC - Shanghai
Honeywell China Inc.
Phone: (86-21) 5257-4568
Fax: (86-21) 6237-2826

Singapore
Honeywell Pte Ltd.
Phone: +(65) 6580 3278
Fax: +(65) 6445-3033

South Korea
Honeywell Korea Co Ltd
Phone: +(822) 799 6114
Fax: +(822) 792 9015

EMEA

Honeywell Process Solutions,
Phone: + 80012026455 or
+44 (0)1344 656000

Email: (Sales)
FP-Sales-Apps@Honeywell.com
or
(TAC)
hfs-tac-support@honeywell.com

AMERICAS

Honeywell Process Solutions,
Phone: (TAC) 1-800-423-9883 or
215/641-3610
(Sales) 1-800-343-0228

Email: (Sales)
FP-Sales-Apps@Honeywell.com
or
(TAC)
hfs-tac-support@honeywell.com

DIAMOND PARTNER

Honeywell

AUTHORIZED DISTRIBUTOR

De Gidts & Feldman BV
The Netherlands
www.dgfg.nl

De Gidts & Feldman

INSTRUMENTATION & FILTRATION

Specifications are subject to change without notice.

For more information
To learn more about SmartLine Transmitters,
visit **www.honeywellprocess.com**
Or contact your Honeywell Account Manager

Process Solutions
Honeywell
1250 W Sam Houston Pkwy S
Houston, TX 77042

Honeywell Control Systems Ltd
Honeywell House, Skimped Hill Lane
Bracknell, England, RG12 1EB

Shanghai City Centre, 100 Jungi Road
Shanghai, China 20061

www.honeywellprocess.com

Honeywell

34-SL-03-03
December 2017
©2017 Honeywell International Inc.