Technical Information

Honeywell

OneWireless XYR 6000 Valve Position Sensor

Series WCX Specifications

34-ST-03-41 February 2010

The OneWireless™ XYR™ 6000 Valve Position Sensor allows remote, reliable valve position monitoring in a variety of applications to avoid the time and safety risk of manually monitoring valves in hazardous areas and remote installations. Wireless technology eliminates the need for communications cabling or power line installation, saving time and money.

The XYR 6000 Valve Position Sensor is based on the proven and reliable MICRO SWITCH™ CX series hazardous location limit switch available for more than 40 years. These robust sensors are constructed to withstand the pressure of an internal explosion.

By combining the proven functionality of MICRO SWITCH technology with an enabler like the OneWireless network, position sensors can now be used for many more remote monitoring applications, including: positioners, manual process valves, safety shower notification, tank level indication, door position, louver/damper position, or any other presence, absence or position sensing application where installing wires is inefficient or cost-prohibitive.

The XYR 6000 Valve Position Sensor delivers the following benefits:

Reliable Operations

- Accurately monitor process parameters in real-time
- Rapid disaster recovery capability
- Identify stuck valve condition
- Monitor true valve position to minimize risk of fluid mixing or cross-contamination

Enhance Safety

- Reduce need for human site monitoring in areas that pose a safety risk

Reduce Environmental Risk

- Reduce the potential for environmental incidence through the explosion-proof packaging of the sensor mechanism
- Identify true position of valve to minimize risk of unwanted fluid release

Achieve Higher Efficiency and Productivity

- Increase process efficiencies through accurate valve position monitoring
- Electronic tagging of all valves in system
- Improve efficiency of scheduled maintenance by targeting valves that have degraded
- Scalability and flexibility with the ability to add/move valve position sensors
- Remotely monitor from anywhere in the facility
- Reduce monitoring costs by eliminating manual valve checks
- Reduce potential for unintended mixing of fluids

Lower System and Commissioning Costs

- Reduce wiring material and labor costs
- Easily and quickly retrofit existing equipment
- Reduce system complexity
- Configure set points electronically
- Eliminate the need for conduit easements
- Reduce or eliminate need for additional permits

Enabled by the OneWireless Network

Honeywell's OneWireless universal mesh network supports multiple industrial protocols and applications simultaneously, providing a single industrial wireless mesh network that is simple to manage and efficient to operate. OneWireless helps optimize plant productivity and reliability, improve safety and security, and ensure regulatory compliance.

Supporting both transmitters such as Honeywell's XYR 6000 and XYR 5000 and Wi-Fi applications such as IntelaTrac PKS, Experion Mobile Station, vibration sensors, personnel/asset location devices, this network delivers a global solution with robust security, predictable power management and multi-speed monitoring.

Honeywell has been implementing wireless solutions since 2003, installing wireless sensor and Wi-Fi networks for industrial handhelds and laptops. Honeywell engineered a single multi-protocol, multi-standard wireless network that communicates simultaneously with Wi-Fi devices and ISA100-ready transmitters.

The OneWireless network is an industrial wireless mesh network that extends the process control network into the field to cover an entire facility. The wireless mesh network is formed with industrial wireless nodes, called multinodes, that self-discover to create an industrial mesh network within seconds.
These nodes include IEEE802.11 and IEEE802.15.4 standard radios which communicate simultaneously with Wi-Fi clients and ISA100-ready I/O devices such as XYR 6000 transmitters. It's flexible enough to add and move devices as needed without degrading reliability.

Key Specifications

Environmental	
Operating temperature Storage temperature Humidity %RH	-40 °C to 70 °C [-40 °F to 158 °F] -40 °C to 85 °C [-40 °F to 185 °F] 0 to 100%
Certifications	
Hazardous Locations	U.S. and Canadian (cCSAus) for Division 1, Class I- Groups A, B, C & D; Class II – Groups E, F & G; Class III
	ATEX / IEC Ex – Ex d [ia] IIC T6 Gb; Ex tb IIIC T85C IP66/67 Db
CE Approval	European Council Directives : 89/3336/EEC
	EMC Directive and 1999/5/EC
Radio and EMC	2,400 to 2438.5 MHz (2.4 GHz) Discrete Sequential Spread Spectrum (DSSS) per FCC Part 15.247 Subpart s “B” & “C” USA - FCC Certified Canada - IC Certified European Union - RTTE/ETSI Conformity
	IC Method: RSS-210, RSS-Gen Issue 2, ICES-003, Issue 4 ETSI: EN300 328 V1.7.1 EN301 893 V1.3.1 EN 301 489-17 V2.1.1 EN 301 489-1 V1.8.1 EN61326-1, 2006 CE mark per EMC, LVD,and R&TTE Directives ATEX Directive 94/9/EC AS NZs 4771-2000 TNTC approved. DSSS RF Transmitter Power Level - No. Amer. 26.0dBm w/antenna max. EU -10.0dBm w/antenna max. Data Rate: 250 Kbps Signal Range: Nominal 305m (1000ft.) between Field Sensor and Infrastructure unit (Multinode or Gateway) with clear line of site
Enclosure	NEMA 1, 3, 4, 6, 6P, 13
	IP66, IP67
Shock	IEC 60068-2-27 (40g max.)
Vibration	IEC 60068-2-6 (5g) max. 10 to 500Hz
Mechanical	
Mounting	Mounting holes tapped 3/8”-24 thread or 0.33” dia through hole. Can be mounted in virtually any position; mounting should result in the antenna being vertically oriented.
	Manual valve mounting bracket not included; customized bracket manufacturing by referral Non-Sparking Actuator not included: Required on “splined shaft versions” but application specific
Electrical	
Accuracy	+/- 5% over 250° when centered between slip clutch
Operating Torque	0,50nM/0.369 LB FT max.
Overtravel	90° max.
Calibration	Calibration is done electronically by setting values for start point and range.
Battery	C Cell Lithium (2) (3.6V Li-SOCl2) non-rechargeable

Exterior Materials	
Housing	A380 Die Cast Aluminum Alloy with epoxy paint finish
Cover	A380 Die Cast Aluminum Alloy with epoxy paint finish
Shafts	303 Stainless Steel
Antenna	2dBi Straight or 90° integral antenna
Weight	Approximately 4.2lbs.(1.9Kg)

Removable Cover

The cover can be removed by trained service technicians to provide clear access to the IR port of the transmitter. The removal of the cover also facilitates access to calibration points and permits installation/removal of the batteries.

Electrical Conduit/Antenna Interface

- 2 Accesses in base as indicated in mounting drawing. Holes are tapped ¾-14 NPT (6 Full Threads MIN).
- Product is shipped with a 2 dBi integral antenna assembly installed.

Mechanical Options

- Mounting holes to be available as thru holes and tapped holes.
- Shaft options
    - Spline shaft (non-sparking actuators required)
    - D shaped shaft
    - Namur style shaft interface
- Namur mounting adapter plate available

Packaging

- CD containing Quick Start Guide, Professional Installation Guide, and DD files

MOUNTING DIMENSIONS

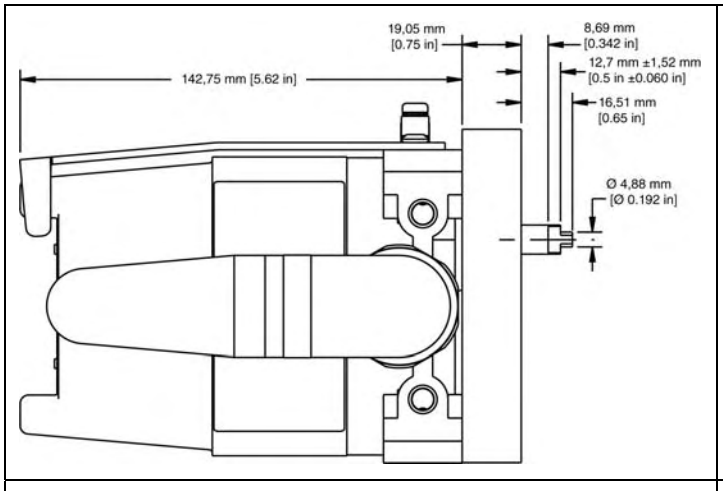

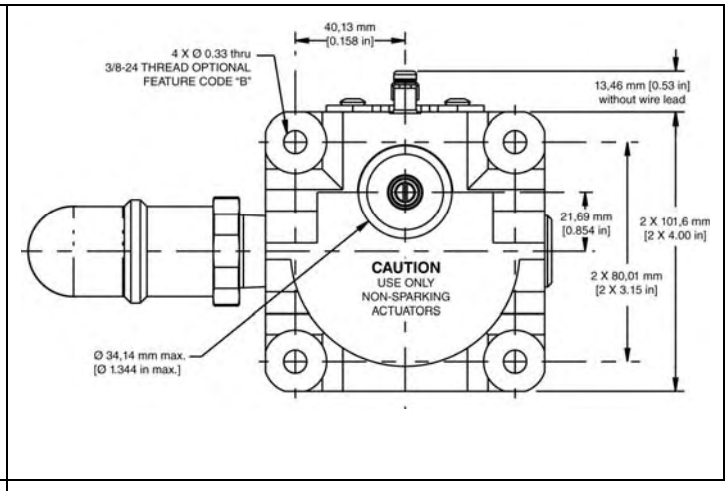

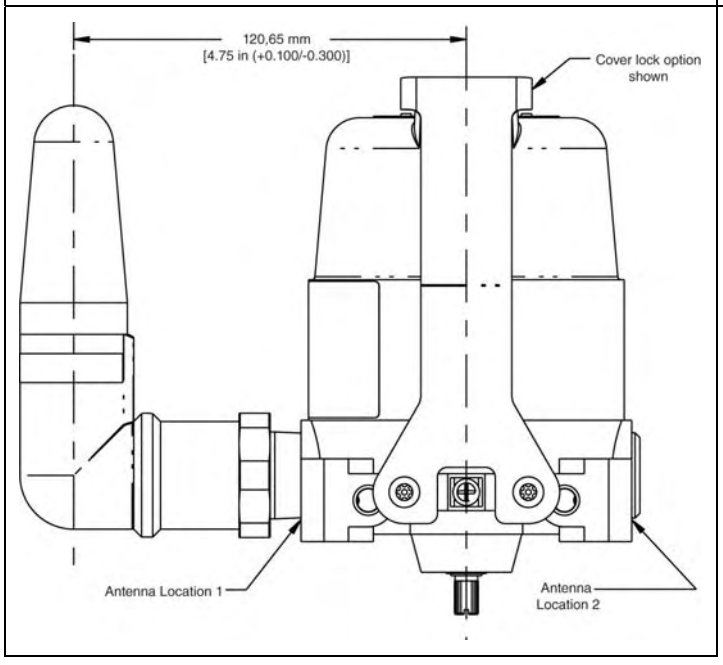

Specifications may change without notice. The information we supply is believed to be accurate and reliable as of this printing. However, we assume no responsibility for its use.

OneWireless, XYR, and MICROSWITCH are trademarks of Honeywell International Inc.

DIAMOND PARTNER

Honeywell
AUTHORIZED DISTRIBUTOR

De Gidts & Feldman BV
The Netherlands
www.dgfg.nl

De Gidts & Feldman
INSTRUMENTATION & FILTRATION

More Information

To learn more about Honeywell's wireless solutions, visit www.honeywell.com/ps/wireless or contact your Honeywell account manager.

Honeywell

Honeywell Process Solutions
1860 West Rose Garden Lane
Phoenix, AZ 85027
Tel: +1-800-423-9883 or +1-800/343-0228
www.honeywell.com/ps

34-ST-03-41
February 2010
© 2010 Honeywell International Inc