INTRA-AUTOMATION

MESS- UND REGELINSTRUMENTE / MEASUREMENT AND CONTROL

TÜVRheinland® CERT ISO 9001

Magnetically Controlled Liquid Level Indicator
Type: ITA

ITA with Aluminium-Indication Rail and Switch

ITA with mA-Output Signal and Digital Display with Volume Linearization

ITA with Steam Casing

ITA with Armaflex-Insulation

Inspection / Certificate

1. Material Certificate EN 10204 2.1
2. Material Certificate EN 10204 3.1
3. Test acc. to NACE
4. Pressure Test Certificate
5. Pressure Test acc. to “AD-Merkblatt” by German TUV
6. Construction and Pressure Test as per TRD by German TUV
7. Dye Penetration Test DIN 54152
8. X-Ray Test acc. to DIN 54111 part 1
9. PMI Check
10. ATEX Certificate
11. General Approval of Construction Inspection acc. to § 19 Water Resources Law about Flammable Liquids / VbF
12. Water Level Controller Component-Check as per VdTUV/WR91-352
13. Germanischer Lloyd
14. Certification of Passivation
15. Weight Certificate

ITA, material PVDF

Technical Catalogue

THE EXPERT IN LEVEL AND FLOW

Headquarters:
(Germany, world-wide sales)
INTRA-AUTOMATION GmbH
Otto-Hahn-Strasse 20
41515 Grevenbroich
GERMANY

☎ +49-(0)2181-75665-0
📠 +49-(0)2181-64492
🖱 info@intra-automation.de
💻 www.intra-automation.com

Subsidiary in the Netherlands:
(Sales in the BENELUX-States)
BV INTRA-AUTOMATION HTP
Keulsveld 17
4705 RS Roosendaal
THE NETHERLANDS

☎ +31-(0)165-322201
📠 +31-(0)165-322970
🖱 info@intra-automation.nl
💻 www.intra-automation.com

© 2013 by Intra-Automation GmbH
ITA is a trade mark of Intra-Automation GmbH
Please submit suggestions or comments regarding this ITA-catalogue to:
info@intra-automation.de

List of Contents

1.	ISO 9001-certificate		1
2.	Functioning and General Information		2
	2.1	Magnetically controlled liquid level gauge type ITA	2
	2.2	Level measurement tasks	2
	2.3	Advantages	3
	2.4	Switches and alarm contacts	3
	2.5	Floats	3
	2.6	Indication rails	4
	2.7	Materials	4
	2.8	Special versions	4
	2.9	Additional equipment	4
	2.10	Acceptance tests and certificates	5
3.	Level gauges in details		6
	3.1.1	ITA-3	6
	3.1.2	ITA-3.0	8
	3.1.3	Order codes for ITA-3 & ITA-3.0	10
	3.2.1	ITA-3 Cryo (cryogenic applications)	18
	3.2.2	Order codes for ITA-3 Cryo	20
	3.3.1	ITA-3-CR64 (cryogenic applications)	27
	3.3.2	Order codes for ITA-3 CR64	29
	3.4.1	ITA-3.5	36
	3.4.2	Order codes for ITA-3.5	38
	3.5.1	ITA-3.8	43
	3.5.2	Order codes for ITA-3.8	45
	3.6.1	ITA-4	49
	3.6.2	ITA-4.0	51
	3.6.3	Order codes for ITA-4 & ITA-4.0	53
	3.7.1	ITA-4.1	57
	3.7.2	ITA-4.1.0	59
	3.7.3	Order codes for ITA-4.1 & ITA-4.1.0	61
	3.8.1	ITA-5	65
	3.8.2	ITA-5.0	67
	3.8.3	Oder codes for ITA-5 & ITA-5.0	69
	3.9.1	ITA-6	74
	3.9.2	ITA-6.0	76
	3.9.3	Order codes for ITA-6 & ITA-6.0	78
	3.10.1	ITA-6 Cryo (cryogenic applications)	86
	3.10.2	Order codes for ITA-6 Cryo	88
	3.11.1	ITA-6 CR64 (cryogenic applications)	93
	3.11.2	Order codes for ITA-6 CR64	95
	3.12.1	ITA-7	100
	3.12.2	ITA-7.0	102
	3.12.3	Order codes for ITA-7 & ITA-7.0	104
	3.13.1	ITA-8.1 (PVC)	111
	3.13.2	Order codes for ITA-8.1	113
	3.14.1	ITA-8.2 (PP)	116
	3.14.2	Order codes for ITA-8.2	118
	3.15.1	ITA-8.3 (PVDF)	121
	3.15.3	Order codes for ITA-8.3	123

List of Contents (continuation)

3.16.1	ITA-9.1 (PVC)	126
3.16.2	Order codes for ITA-9.1	128
3.17.1	ITA-9.2 (PP)	130
3.17.2	Order codes for ITA-9.2	132
3.18.1	ITA-9.3 (PVDF)	134
3.18.2	Order codes for ITA-9.3	136
3.19.1	ITA-10	138
3.19.2	ITA-10.0	140
3.19.3	Order codes for ITA-10 & ITA-10.0	142
3.20.1	ITA-11	149
3.20.2	ITA-11.0	151
3.20.3	Order codes for ITA-11 & ITA-11.0	153
3.21.1	ITA-12	160
3.21.2	ITA-12.0	162
3.21.3	Order codes for ITA-12 & ITA-12.0	164
3.22.1	ITA-13	171
3.22.2	ITA-13.0	173
3.22.3	Order codes for ITA-13 & ITA-13.0	175

4.	Equipment	182
4.1	ITA-3 Cryo, ITA-3 CR64	182
4.2	Armaflex®-insulation	183
4.3	Heat insulation	184
4.4	Technical data switches	185
4.5	Contact NJ-EX	188
4.6	Indication rails	189
4.7	Digital indication with volume linearization	190
4.8	Niveau-source	191
4.9	Reed-contact	192
4.10	Magnetostrictive level transmitter	193
4.11	Transmitter	195

5.	Special constructions	223
5.1	ITA-T1S	223
5.2	ITA-T1R	227

Order codes:

For mag. level gauges (behind each subchapter of chapter 3)	
For add. Equipment	206
For special designs	210
For spare parts	211
For documentation	220

1. ISO 9001 Certificate

Certificate

Standard **ISO 9001:2008**

Certificate Registr. No. 01 100 036028

TÜV Rheinland Cert GmbH certifies:

Certificate Holder:

INTRA-AUTOMATION GmbH
MESS- UND REGELINSTRUMENTE

Intra-Automation GmbH
Otto-Hahn-Straße 20 • D - 41515 Grevenbroich

Scope: Manufacturing, design and sale of measuring and control equipment

An audit was performed, Report No. 036028. Proof has been furnished that the requirements according to ISO 9001:2008 are fulfilled.
The due date for all future audits is 25-01 (dd.mm).

Validity: The certificate is valid from 2013-02-18 until 2016-01-25.
First certification 2004

2013-03-01

TÜV Rheinland Cert GmbH
Am Grauen Stein · 51105 Köln

DGA-ZM-58-95-00

www.tuv.com

TÜVRheinland®
Precisely Right.

10/201 4.08 E A4 © TÜV, TUEV and TUV are registered trademarks. Utilisation and application requires prior approval.

2. Functioning and General Information

2.1 Magnetically controlled liquid level gauge type ITA

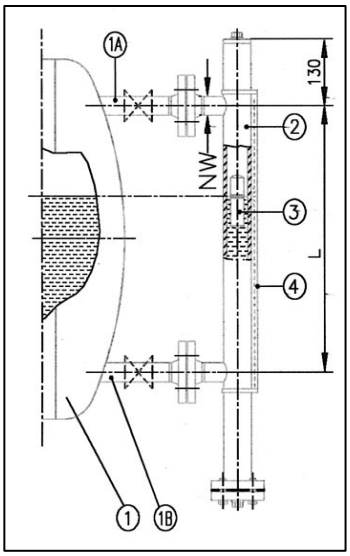

The product line ITA is used wherever fluid level has to be monitored, indicated, and controlled in a reliable way, especially with corrosive, toxic and inflammable fluids with a viscosity up to max. 5000 mPa s.

The ITA level indicators offer a reliable, accident-free and maintenance-free usage, through a simple and break-resistant construction at a maximum process pressure of 320 bar and a temperature range from –50 through 400 °C. The fluid level is indicated directly with a separation of the measurement and indication area. The magnetic transfer of the fluid level from the tank to the indicator is continuous and vibration-resistant, even in the case of fast changing levels.

It is possible to mount the indication rail in any position on the pipe diameter. There is no corrosion of the indication system. The ITA instruments may be used in open or closed vessels. A definite level measurement without any power supply is guaranteed due to a continuous rotation of the wafers, even if a power loss in the plant occurs.

Functional Principle:

A float chamber (2) is connected (1A and 1B) to the tank (1), and following the law of communicating tubes, the level in the float chamber is equal to the level of the tank. The float (3) follows the fluid level and transmits its movements contact-free to the indication rail (4) mounted on the outside. The float has a special magnet, which rotates the wafers by 180° as it passes them. The result is a clearly defined level indication, with the level shown in a continuous red stripe strongly contrasted to the white above. At increasing levels the color of the wafer changes from white to red and vice versa.

The indication rail and the wafers are made of Makrolon so that there will never be a problem of corrosion in humid and aggressive atmosphere. Each wafer has a permanent magnet, that is why the indicator is shock proof. Moreover, as there is no turbidness because of product contamination of the UV-radiation, the readability remains unobjectable even after some years.

All models are available with electronic alarms, which can be mounted at any position during operation of the system, which renders possible an optimal definition of the min. and max. data points. The indicator can be equipped with a scale for volume or height (depending on the customer's specifications).

2.2 Level Measurement Tasks

1.) Indicating the fluid level
2.) Monitoring the level with alarm contacts
3.) Transferring the level using measurement value sensors (analogue signal 4…20 mA) to electronic display units
4.) Interface level measurement.

2.3 Advantages

No risk of glass breakage as a result of the separation of the measurement and indicator areas. The float principle means that changes of the density in the medium have very little influence on the indication accuracy.

2.4 Switches / Alarm Contacts

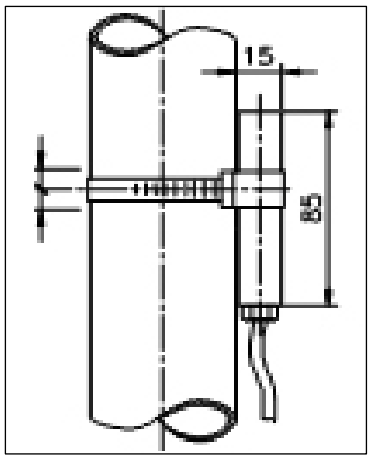

Magnetic level indicators can be equipped with an arbitrary number of switch contacts. In contrast to electric float switches, switch contacts may be installed at any position of the stand pipe. Wherever additional float chambers are needed for float switches, magnetically controlled level gauges offer a considerable price benefit.

Electrical level measurement transducers which use the displacement principle must be recalibrated each time the fluid density has changed. The price of a magnetically controlled level indicator with integral electrical measurement transducer is considerably lower than level measurement transducers. The reed chain with an R/I measurement transducer can be changed without interrupting the operation. The measurement chamber is hermetically sealed – there is no contact between the fluid chamber and the reed chain.

The switches / alarm contacts are secured with pipe clips, and can be adjusted to any desired height. The connection is using 3-core cable or casing terminals. The changeover contact can be used as opener or closer. The switches are also available as explosion-proof version.

2.5 Floats

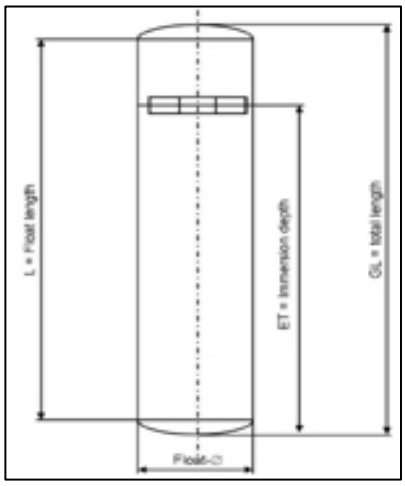

The construction of the float requires a great amount of technical knowledge. The float with its special magnet can rotate freely in the float chamber. The Intra construction avoids a guide wire and other devices. The float materials are stainless steel, 1.4571(316Ti), 1.4435 (316L) or titanium (PVC, PP, PVDF in case of the plastics level gauges). Floats without gas-pre-stressing are used from a minimum density of 0,35 kg/dm³. The maximum process pressure for sealed floats is 250 bar; at higher pressures the floats must be relieved from pressure (not to be used for condensing media). Intra-Automation mag. level gauges type ITA work up to a viscosity of 5000 mPa s.

2.6 Indication rail

The ITA level gauges can be supplied with indication rails made from 2 different materials. Makrolon indication rails are resistible to breakage. The max. permissible media temperature is 120°C, with 20°C ambient temperature and natural convection as test conditions. The rails are resistible to UV-radiation and aggressive atmospheres and are sealed against dust by two seal-caps. Aluminum indication rails can be supplied as one part rail up to a length of 6 m. The sight cover material depends on the temperature, up to 150°C the material is Makrolon and up to 400°C it is glass. The surface of the indication rail can b coated with Saekaphen if required, the standard surface is brown-anodized.

2.7 Materials

The gauge chamber and the floats are made of stainless steel (1.4571), 254SMO (1.4529), titanium, Hasteloy, PVC, PP, PVDF and PTFE. Other materials on request.

2.8 Special Versions

1. Transmitter, output singal 0…20 or 4…20 mA
2. Steam jacket, e.g. for viscous media
3. Float chamber with Armaflex®-insulation, for temperatures below zero (centigrade)
4. Scale made of Gravoloy (white plastic) or aluminium red anodized
5. Two parts versions without interruption of the indication, for measuring lengths > 5 m
6. Works report DIN 50049
7. Level indicator in Marine design (Germanischer Lloyd, Bureau Veritas, Det Norske Veritas, Lloyds Register)
8. Usage as an overfilling guard for tanks storing inflammable and non-inflammating water polluting liquids
9. ITA Cryogenic versions for refrigerants
10. ITA with lining made of PTFE
11. ITA with inside coating made of E-CTFE (Halar)

2.9 Additional Equipment

1. Anti freezing heating belt for use in the open air
2. Vent/drain valves, threaded of flanged connection
3. Measuring scale, divisions to client's specifications
4. Armaflex insulation
5. Protective hose, additional protection of the indicator against dust, dirt and moisture
6. Plastic indicator with armouring

2.10 Inspection / Certificates

1. Material certificate EN 10204 2.1
2. Material certificate EN 10204 2.2
3. Material certificate EN 10204 3.1/3.2/3.3
4. Test according to NACE
5. Pressure test certificate
6. Pressure test according to "AD-Merkblatt" by the German TÜV
7. Construction and pressure test as per TRD by the TÜV
8. Dye penetration test DIN 54152
9. X-ray-test in accordance with DN 54111 part 1
10. PMI-check
11. ATEX certification
12. General approval of construction inspection in accordance with § 19 water resources law - WHG - and § 12 law about flammable liquids - VbF
13. Water level controller component check as per VdTÜV/WR91-352
14. Germanischer Lloyd
15. Certificate of Passivation
16. Weight certificate
17. PED 97/23/EG

3. Level Gauges in Details

3.1.1 ITA-3

Characteristics: PN16 / Float pipe and flange material: 1.4404

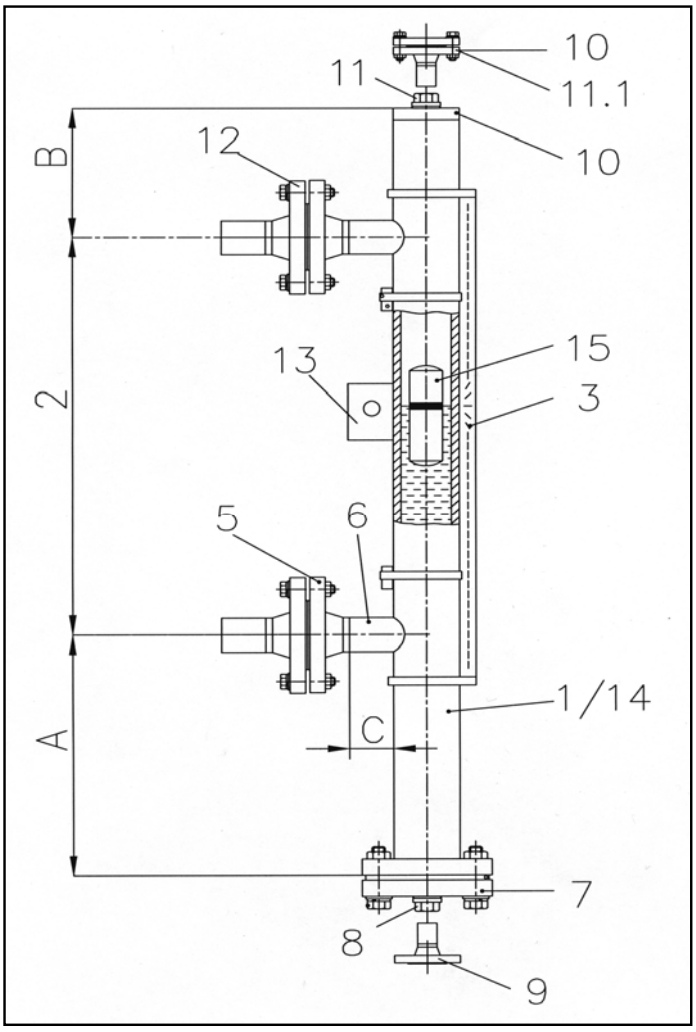

Key:

1 Float pipe welded, dimensions 60,3 x 2 mm
2 c to c distance
3 Design (indication rail)
5 Process connection side/side
6 Side studs welded with T pieces for 100 % X-ray testing
7 Float removal flange
8 Drain plug
9 Additional drain flange, open
10 Float pipe top end finish
11 Vent plug
12 Counter flanges
13 Additional bracket
14 Float pipe seamless
15 Float

Technical specifications magnetic level gauge type ITA-3

Principle:	Communicating tubes with magnetic float
Mounting position:	vertical
Measuring range:	**max. 5000 mm (one-part)** > 5000 mm 2- or multipart
Pipe diameter:	**60,3 x 2 mm welded,** 60,3 x 2 mm seamless 2" Sch10 **necking connection** or buttweld with T-pieces
Process connection:	to specify: **Flanges DN15…50 (1/2"…2" 150#),** **Welding or threaded stud**
Drain/Vent connections:	**Plug R1/2"** (for more please see order codes)
Pipe material:	**1.4404**; 1.4435; 1.4539; Hastelloy C4 (2.4610); Inconel 625 (2.4856); Inconel 825 (2.4858); Titan (3.7035) (other materials on request)
Flange material:	same as pipe material
Float material:	**1.4404** Titan, Titan/E-CTFE-coated
Operation temperature:	-50..+400 °C
Operation pressure:	max. 16 bar
Operation density:	min. 0,3761 kg/dm³
Viscosity:	max. 5000 mPa s
Bolts & Nuts:	**CS** SS
Gasket	**PTFE up to 100 °C** **Klingersil C4400 up to 175 °C** **Graphit spiral wound up to 400 °C****
Indication rail:	Makrolon up to 120 °C Aluminium up to 400 °C 1.4301 up to 400 °C
Float types:	Cylindical, sealed type Length: **-270 mm** -130 mm -150 mm -210 mm -330 mm -430 mm -530 mm -630 mm
Standard dimensions:	-A = 240 mm* -B = 130 mm - C = 40 mm

Base equipment printed in bold letters!
***for densities < 0,7374 kg/dm³ enlarge the scale A**
****only with vent- and/or drain flanges DN50 resp. 2"**

3.1.2 ITA-3.0

Characteristics: PN16 / Float pipe: 1.4404 and flanges : CS

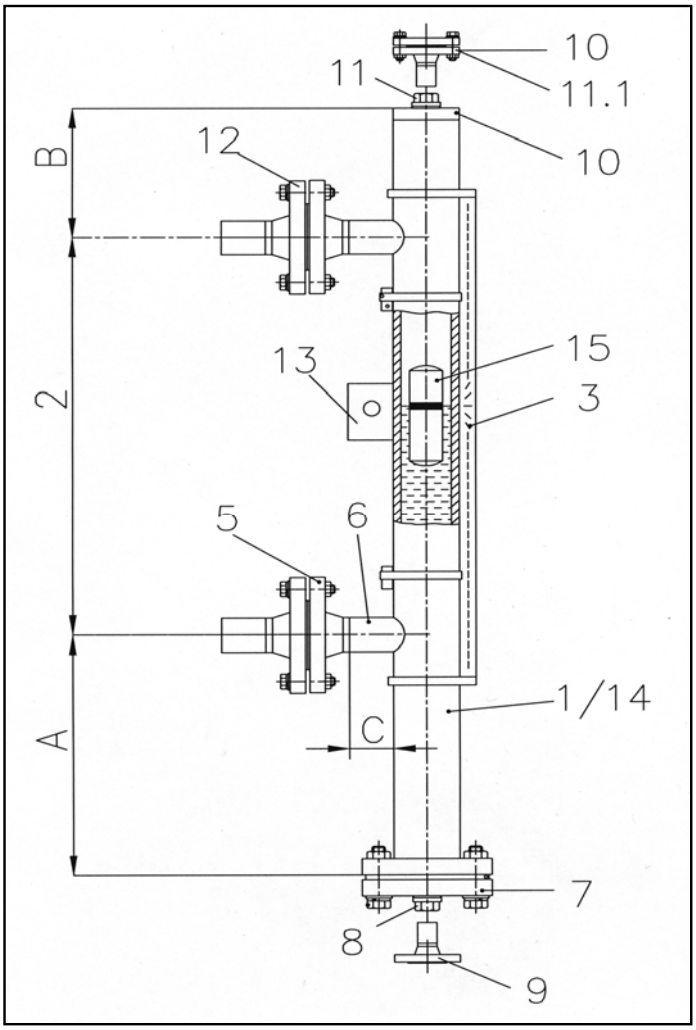

Key:

1 Float pipe welded, dimensions 60,3 x 2 mm
2 c to c distance
3 Design (indication rail)
5 Process connection side/side
6 Side studs welded with T pieces for 100 % X-ray testing
7 Float removal flange
8 Drain plug
9 Additional drain flange, open
10 Float pipe top end finish
11 Vent plug
12 Counter flanges
13 Additional bracket
14 Float pipe seamless
15 Float

Technical specifications magnetic level gauge type ITA-3.0

Principle:	Communicating tubes with magnetic float
Mounting position:	vertical
Measuring range:	**max. 5000 mm (one-part)** > 5000 mm 2- or multipart
Pipe diameter:	**60,3 x 2 mm welded,** 60,3 x 2 mm seamless 2" Sch10 **necking connection** or buttweld with T-pieces
Process connection:	to specify: **Flanges DN15…50 (1/2"…2" 150#),** **Welding or threaded stud**
Drain/Vent connections:	**Plug R1/2"** (for more please see order codes)
Pipe material:	**1.4404**; 1.4435; 1.4539; Hastelloy C4 (2.4610); Inconel 625 (2.4856); Inconel 825 (2.4858); Titan (3.7035) (other materials on request)
Flange material:	**CS**
Float material:	**1.4404** Titan, Titan/E-CTFE-coated
Operation temperature:	-50..+400 °C
Operation pressure:	max. 16 bar
Operation density:	min. 0,3761 kg/dm³
Viscosity:	max. 5000 mPa s
Bolts & Nuts:	**CS** SS
Gasket	**PTFE up to 100 °C** **Klingersil C4400 up to 175 °C** **Graphit spiral wound up to 400 °C******
Indication rail:	Makrolon up to 120 °C Aluminium up to 400 °C 1.4301 up to 400 °C
Float types:	Cylindical, sealed type Length: **-270 mm** -130 mm -150 mm -210 mm -330 mm -430 mm -530 mm -630 mm
Standard dimensions:	-A = 240 mm* -B = 130 mm - C = 40 mm

Base equipment printed in bold letters!
***for densities < 0,7374 kg/dm³ enlarge the scale A**
****only with vent- and/or drain flanges DN50 resp. 2"**

3.1.3 Order codes ITA-3 & ITA-3.0

Mag. Level Gauge
ITA-3 & ITA-3.0 PN16/150 lbs

Order codes mag. level gauge type ITA- 3 & ITA-3.0 PN16/150 lbs

Code	Description
ITA-3	**1. Float pipe welded Dimensions 60,3 x 2 mm**
	2. c to c distance
L	c to c distance in mm
	3. Design
0	without indication rail each 100 mm
1	Indication rail material: Makrolon max. 120 °C; each 100 mm
2	Indication rail material: Aluminium max. 400 °C, pro 100 mm
3	Indication rail material: 1.4401 max. 400 °C, pro 100 mm
	4. c to c distance < 5000 mm
0	< 5000 mm - one part design
1	> 5000 mm - with flange connection; DN 32 PN 16, two or more parts design
2	> 5000 mm - with flange connection; DN 50 PN 16, two or more parts design
A	> 5000 mm - with flange connection; 2" ANSI 150 lbs, two or more parts design
	5. Process connection side/side
0	without
Y	Welding connection (please specify)
Z	Threaded connection (please specify)
1	Flanges DN 15 PN 16
2	Flanges DN 20 PN 16
3	Flanges DN 25 PN 16
4	Flanges DN 32 PN 16
5	Flanges DN 40 PN 16
6	Flanges DN 50 PN 16
A	Flanges 1/2" ANSI 150 lbs
B	Flanges 3/4" ANSI 150 lbs
C	Flanges 1" ANSI 150 lbs
D	Flanges 1 1/4" ANSI 150 lbs
E	Flanges 1 1/2" ANSI 150 lbs
F	Flanges 2" ANSI 150 lbs
	Flanges 300 lbs
0	without
H	additional price for flanges 300 lbs

Mag. Level Gauge
ITA-3 & ITA-3.0 PN16/150 lbs

Order codes mag. level gauge type ITA- 3 & ITA-3.0 PN16/150 lbs

Code	Description
	5.1 Surface side flanges
0	without
A	Standard- Surface Form C
B	Standard-Surface RF
C	Surface Form D Rz=40
D	Surface Form E Rz=16
E	Surface RFSF (smooth finished)
F	Surface Nut (DIN2512)
G	Surface groove large
H	Surface Feder (DIN2512)
K	Surface tongue-large
L	Surface RTJ (ANSI) 1/2" bis 2"
	6. Side studs welded with T-pieces for 100 % X-ray testing
0	without
T	T-pieces
	7. Float removal flange (bottom side)
0	without
1	End cap (only if float removal flange (top side))
2	Flange DN 32 PN 16 incl. blind flange
3	Flange DN 50 PN 16 incl. blind flange
A	Flange 2" ANSI 150 lbs incl. blind flange
4	Flange DN 50 PN 16 reinforced for shut off valve on side
C	Flange 2" ANSI 150 lbs reinforced for shut off valve on side
	7.1 Surface float removal flange (bottom side) (only DN50 or 2")
0	without (Float removal flange (bottom side) = end cap or < DN50 or 2")
A	Standard- Surface Form C
B	Standard-Surface RF
C	Surface Form D Rz=40
D	Surface Form E Rz=16
E	Surface RFSF (smooth finished)
F	Surface groove (DIN2512)
G	Surface groove large
H	Surface tongue (DIN2512)
K	Surface tongue-large
L	Surface RTJ (ANSI) 1/2" bis 2"

Mag. Level Gauge
ITA-3 & ITA-3.0 PN16/150 lbs

Order codes mag. level gauge type ITA- 3 & ITA-3.0 PN16/150 lbs

Code	Description
	7.2 Bolts & nuts float removal flange (bottom side)
0	without (Float removal flange (bottom side) = end cap)
31	M16 x 65 mm; mat. zinced steel; flange DN 32 PN 16; DN 931
42	M16 x 65 mm; mat. A2-70; flange DN 32 PN 16; DIN 931
63	M16 x 65 mm; mat. zinced steel; flange DN 50 PN 16; DIN 931
64	M16 x 65 mm; mat. A2-70; flange DN 50 PN 16;K DIN 931
3X	M16 x 65 mm, PTFE-coated, flanges DN 50 PN 16
3A	5/8" x 83 mm;RF, mat. zinced steel A193B7/A1942H; flange 2" ANSI 150 lbs, ANSI B16.5
3B	5/8" x 83 mm;RF, mat. stainless steel A193B8 A1948M; flange 2" ANSI 150 lbs, ANSI B16.5
3C	5/8" x 95 mm;RTJ, mat. zinced steel A193B7/A1942H; flange 2" ANSI 150 lbs, ANSI B16.5
3D	5/8" x 95 mm;RTJ, mat. stainless steel A193B8 A1948M; flange 2" ANSI 150 lbs, ANSI B16.5
3T	5/8" x 83 mm;RF, mat.: PTFE coated, flange 2" 150 lbs
3V	5/8" x 95 mm;RTJ, mat.: PTFE coated, flange 2" 150 lbs
	8. Drain plug
0	without
1	Drain plug G 1/2" with soft iron gasket
4	Drain plug 1/2" NPT
5	Drain plug 3/4" NPT
6	Drain plug 1" NPT
	9. Additional drain flange, open
0	without
1	Drain stud with flange DN 15 PN 16
2	Drain stud with flange DN 20 PN 16
3	Drain stud with flange DN 25 PN 16
4	Drain stud with flange DN 32 PN 16
5	Drain stud with flange DN 40 PN 16
A	Drain stud with flange 1/2" ANSI 150 lbs
B	Drain stud with flange 3/4" ANSI 150 lbs
C	Drain stud with flange 1" ANSI 150 lbs
D	Drain stud with flange 1 1/4" ANSI 150 lbs
E	Drain stud with flange 1 1/2" ANSI 150 lbs
	9.1 Drain flange with concentric reducer (X-ray testing)
0	without
1	DN 15 PN 16
2	DN 20 PN 16
3	DN 25 PN 16
4	DN 32 PN 16
5	DN 40 PN 16
A	1/2" ANSI 150 lbs
B	3/4" ANSI 150 lbs
C	1" ANSI 150 lbs
D	1 1/4" ANSI 150 lbs
E	1 1/2" ANSI 150 lbs

Mag. Level Gauge
ITA-3 & ITA-3.0 PN16/150 lbs

Order codes mag. level gauge type ITA- 3 & ITA-3.0 PN16/150 lbs

Code	Bezeichnung
	9.2 Surface open drain flange
0	without (additional drain flange = without)
A	Suface Form C
B	Surface RF
C	Surface Form D Rz=40
D	Surface Form E Rz=16
E	Surface RFSF (smooth finished)
F	Surface groove (DIN2512)
G	Surface groove large (ANSI B16.5)
H	Surface tongue (DIN2512)
K	Surface tongue-large (ANSI B16.5)
L	Surface RTJ (ANSI B16.5) 1/2" to 2"
	10. Float pipe top end finish
0	without
1	End cap
2	Flange with blind flange DN 32 PN 16
3	Flange with blind flange DN 50 PN 16
5	Flange with blind flange DN 50 PN 16, reinforced for shut off valve on side
4	Flange with blind flange 2" ANSI 150 lbs
4	Flange with blind flange 2" ANSI 150 lbs reinforced for shut off valve on side
	10.1 Surface float pipe top end finish flange (only DN50 or 2")
0	without (Float pipe top end finish = End cap or < DN50 or 2")
A	Standard- Surface Form C
B	Standard-Surface RF
C	Surface Form D Rz=40
D	Surface Form E Rz=16
E	Surface RFSF (smooth finished)
F	Surface groove (DIN2512)
G	Surface groove large
H	Surface tongue (DIN2512)
K	Surface tongue-large
L	Surface RTJ (ANSI) 1/2" bis 2"
	10.2 Bolts & nuts float pipe top end finish flange (only DN50 or 2")
0	without (Float removal flange (bottom side) = end cap)
31	M16 x 65 mm; mat. zinced steel; flange DN 32 PN 16; DN 931
42	M16 x 65 mm; mat. A2-70; flange DN 32 PN 16; DIN 931
63	M16 x 65 mm; mat. zinced steel; flange DN 50 PN 16; DIN 931
64	M16 x 65 mm; mat. A2-70; flange DN 50 PN 16;K DIN 931
3X	M16 x 65 mm, PTFE-coated, flanges DN 50 PN 16
3A	5/8" x 83 mm;RF, mat. zinced steel A193B7/A1942H; flange 2" ANSI 150 lbs, ANSI B16.5
3B	5/8" x 83 mm;RF, mat. stainless steel A193B8 A1948M; flange 2" ANSI 150 lbs, ANSI B16.5
3C	5/8" x 95 mm;RTJ, mat. zinced steel A193B7/A1942H; flange 2" ANSI 150 lbs, ANSI B16.5
3D	5/8" x 95 mm;RTJ, mat. stainless steel A193B8 A1948M; flange 2" ANSI 150 lbs, ANSI B16.5
3T	5/8" x 83 mm;RF, mat.: PTFE coated, flange 2" 150 lbs
3V	5/8" x 95 mm;RTJ, mat.: PTFE coated, flange 2" 150 lbs

Mag. Level Gauge
ITA-3 & ITA-3.0 PN16/150 lbs

Order codes mag. level gauge type ITA- 3 & ITA-3.0 PN16/150 lbs

Code	Description
	11. Vent plug at top end
0	without
1	Vent plug G 1/2" with soft iron gasket
4	Vent plug 1/2" NPT
5	Vent plug 3/4" NPT
6	Vent plug 1" NPT
	11.1 Vent flange welded to end cap instead of vent plug
0	without
1	Flanged DN 15 PN 16 (socket weld construction to endcap)
2	Flanged DN 20 PN 16 (socket weld construction to endcap)
3	Flanged DN 25 PN 16 (socket weld construction to endcap)
4	Flanged DN 32 PN 16 (socket weld construction to endcap)
5	Flanged DN 40 PN 16 (socket weld construction to endcap)
6	Flanged DN 50 PN 16 (socket weld construction to endcap)
A	Flanged 1/2" ANSI 150 lbs (socket weld construction to endcap)
B	Flanged 3/4" ANSI 150 lbs (socket weld construction to endcap)
C	Flanged 1" ANSI 150 lbs (socket weld construction to endcap)
D	Flanged 1 1/4" ANSI 150 lbs (socket weld construction to endcap)
E	Flanged 1 1/2" ANSI 150 lbs (socket weld construction to endcap)
	11.2 Vent flange with concentric reducer (X-ray testing)
0	without
1	DN 15 PN 16
2	DN 20 PN 16
3	DN 25 PN 16
4	DN 32 PN 16
5	DN 40 PN 16
A	1/2" ANSI 150 lbs
B	3/4" ANSI 150 lbs
C	1" ANSI 150 lbs
D	1 1/4" ANSI 150 lbs
E	1 1/2" ANSI 150 lbs
	11.3 Surface vent flange welded to end cap(only DN50 or 2")
0	without (Vent flange welded to end cap = without)
A	Standard- Surface Form C
B	Standard-Surface RF
C	Surface Form D Rz=40
D	Surface Form E Rz=16
E	Surface RFSF (smooth finished)
F	Surface groove (DIN2512)
G	Surface groove large
H	Surface tongue (DIN2512)
K	Surface tongue-large
L	Surface RTJ (ANSI) 1/2" bis 2"

Mag. Level Gauge
ITA-3 & ITA-3.0 PN16/150 lbs

Order codes mag. level gauge type ITA- 3 & ITA-3.0 PN16/150 lbs

Code	Description
	12. Counter flanges
0	without
1	DN 15 PN 16
2	DN 20 PN 16
3	DN 25 PN 16
4	DN 32 PN 16
5	DN 40 PN 16
6	DN 50 PN 16
A	1/2" 150 lbs
B	3/4" 150 lbs
C	1" 150 lbs
D	1 1/4" 150 lbs
E	1 1/2" 150 lbs
F	2" 150 lbs
	12.1 Surface counter flanges
0	without (Counter flanges = without)
A	Standard- Surface Form C
B	Standard-Surface RF
C	Surface Form D Rz=40
D	Surface Form E Rz=16
E	Surface RFSF (smooth finished)
F	Surface groove (DIN2512)
G	Surface groove large
H	Surface tongue (DIN2512)
K	Surface tongue-large
L	Surface RTJ (ANSI) 1/2" bis 2"
	12.2 Bolts & Nuts counter flanges
0	without
31	M16 x 65 mm; mat. zinced steel; flange DN 32 PN 16; DN 931
42	M16 x 65 mm; mat. A2-70; flange DN 32 PN 16; DIN 931
63	M16 x 65 mm; mat. zinced steel; flange DN 50 PN 16; DIN 931
64	M16 x 65 mm; mat. A2-70; flange DN 50 PN 16;K DIN 931
3X	M16 x 65 mm, PTFE-coated, flanges DN 50 PN 16
3A	5/8" x 83 mm;RF, mat. zinced steel A193B7/A1942H; flange 2" ANSI 150 lbs, ANSI B16.5
3B	5/8" x 83 mm;RF, mat. stainless steel A193B8 A1948M; flange 2" ANSI 150 lbs, ANSI B16.5
3C	5/8" x 95 mm;RTJ, mat. zinced steel A193B7/A1942H; flange 2" ANSI 150 lbs, ANSI B16.5
3D	5/8" x 95 mm;RTJ, mat. stainless steel A193B8 A1948M; flange 2" ANSI 150 lbs, ANSI B16.5
3T	5/8" x 83 mm;RF, mat.: PTFE coated, flange 2" 150 lbs
3V	5/8" x 95 mm;RTJ, mat.: PTFE coated, flange 2" 150 lbs
	13. Additional bracket welded to the float pipe
0	without
H	Bracket
	14. Float pipe seamless
0	without
S	60,3 x 2 mm seamless; each 100 mm

Mag. Level Gauge
ITA-3 & ITA-3.0 PN16/150 lbs

Prices for mag. Level Gauges type: ITA-3 & ITA-3.0 PN16/150 lbs

	Description						
Floats							
Code	**Pressure [bar]**	**Material**	**Diameter [mm]**	**Length [mm]**	**min. Density [kg/dm³]**	**vented [Y/N]**	**Notes**
3V0100K1	16	316L	52	125	1,4907	N	
3V0100K3	16	316L	52	125	1,0524	N	only with 316SS or Aluminium indication rail
3V0120K1	16	316L	52	145	1,2346	N	
3V0120K3	16	316L	52	145	0,9034	N	only with 316SS or Aluminium indication rail
3V0150K1	16	316L	52	175	0,9905	N	
3V0150K3	16	316L	52	175	0,8606	N	only with 316SS or Aluminium indication rail
3V0180K1	16	316L	52	205	0,8781	N	
3V0180K3	16	316L	52	205	0,7022	N	only with 316SS or Aluminium indication rail
3V0240K1	16	316L	52	265	0,7374	N	
3V0240K3	16	316L	52	265	0,6209	N	only with 316SS or Aluminium indication rail
3V1240K1	40	316L	52	265	1,000	N	
3T0100K1	16	Titanium	50,8	125	1,1788	N	do not use with hydrogen or alcohol compounds
3T0100K3	16	Titanium	50,8	125	0,7821	N	only with 316SS or Aluminium indication rail; do not use with hydrogen or alcohol compound
3T0120K1	16	Titanium	50,8	145	0,9646	N	do not use with hydrogen or alcohol compounds
3T0120K3	16	Titanium	50,8	145	0,6514	N	only with 316SS or Aluminium indication rail; do not use with hydrogen or alcohol compound
3T0150K1	16	Titanium	50,8	175	0,7763	N	do not use with hydrogen or alcohol compounds
3T0150K3	16	Titanium	50,8	175	0,5675	N	only with 316SS or Aluminium indication rail; do not use with hydrogen or alcohol compound
3T0180K1	16	Titanium	50,8	205	0,6716	N	do not use with hydrogen or alcohol compounds
3T0180K3	16	Titanium	50,8	205	0,5094	N	only with 316SS or Aluminium indication rail; do not use with hydrogen or alcohol compound
3T0240K1	16	Titanium	50,8	265	0,5723	N	do not use with hydrogen or alcohol compounds
3T0240K3	16	Titanium	50,8	265	0,4550	N	only with 316SS or Aluminium indication rail; do not use with hydrogen or alcohol compound
3T0300K1	16	Titanium	50,8	325	0,4955	N	do not use with hydrogen or alcohol compounds
3T0300K3	16	Titanium	50,8	325	0,4063	N	only with 316SS or Aluminium indication rail; do not use with hydrogen or alcohol compound
3T0400K1	16	Titanium	50,8	425	0,4358	N	do not use with hydrogen or alcohol compounds
3T0400K3	16	Titanium	50,8	425	0,3719	N	only with 316SS or Aluminium indication rail; do not use with hydrogen or alcohol compound
3T0500K1	16	Titanium	50,8	525	0,4017	N	do not use with hydrogen or alcohol compounds
3T0500K3	16	Titanium	50,8	525	0,3539	N	only with 316SS or Aluminium indication rail; do not use with hydrogen or alcohol compound
3T0600K1	16	Titanium	50,8	625	0,3761	N	do not use with hydrogen or alcohol compounds
3T0600K3	16	Titanium	50,8	625	0,3371	N	only with 316SS or Aluminium indication rail; do not use with hydrogen or alcohol compound
3H0150K1	16	Titanium, Halar-coatec	52	175	0,902	N	
3HC012K1	16	Hastelloy C4	52	175	1,2455	N	
3HC024K1	16	Hastelloy C4	52	265	0,7510	N	
3HC024K3	16	Hastelloy C4	52	265	0,6296	N	only with 316SS or Aluminium indication rail

For additional accessories please refer to the chapters "Special equipment" and "Electrical accessories and Switches"

3.1.3 Order code scheme for ITA-3 & ITA-3.0

1. Type of level gauge ITA-3 or ITA-3.0	2. C to C distance in mm [or inches]	3. Design	4. C to C distance > 5000 mm	5. Process connection [side/side]	5.1 Surface side flanges	6. Side studs welded with T-pieces for 100 % X-ray-testing	7. Float removal flange	7.1 Surface float removal flange	7.2 Bolts & nuts float removal flange	8. Drain plug	9. Additional drain flange, open
ITA-3											
ITA-3.0											

9.1 Drain flange with concentric reducer (X-ray testing)	9.2 Surface open drain flange	10. Float pipe top end finish	10.1 Surface top end finish flange	10.2 Bolts and nuts rop end finish flange	11. Vent plug at top end	11.1 Vent flange welded to end cap instead of vent plug	11.2 Vent flange with concentric reducer (X-ray testing)	11.3 Surface vent flange welded to end cap	12. Counter flanges	12.1 Surface counter flanges	12.2 Bolts & nuts counter flanges	13. Additional bracket welded to the float pipe	14. Float pipe seamless	15. Float

3.2.1 ITA-3 Cryo

Characteristics: PN16 / Float pipe and flange material: 1.4404

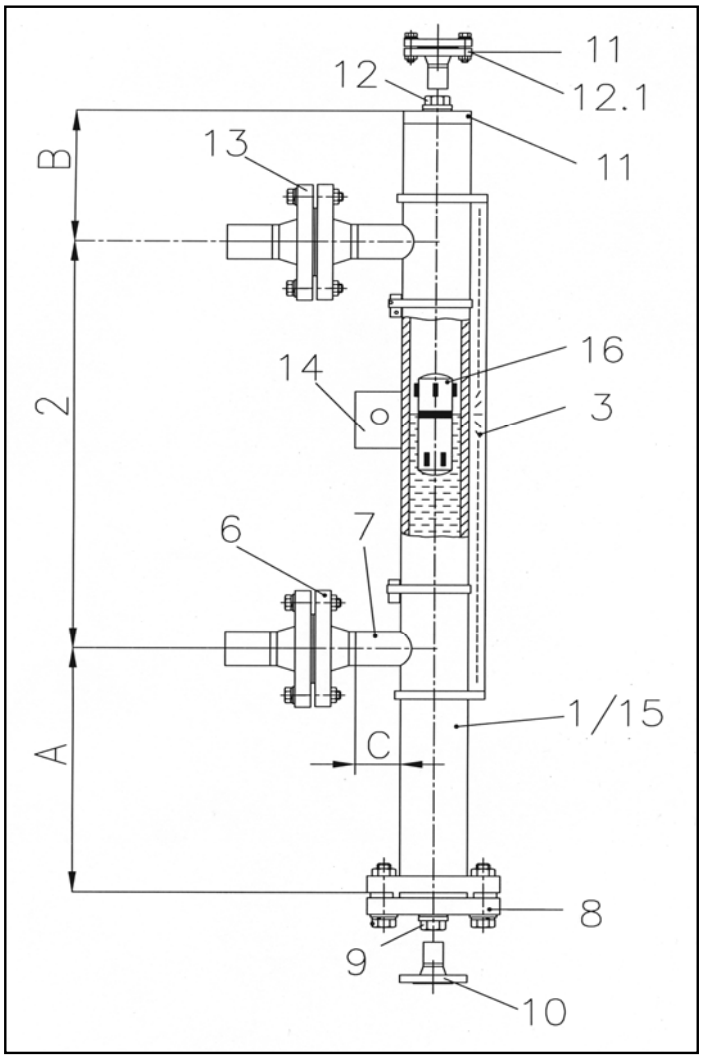

Key:

1 Float pipe welded, dimensions 60,3 x 2 mm
2 c to c distance
3 Design (indication rail)
4 Armaflex® insulation
6 Process connection side/side
7 Side studs welded with T pieces for 100 % X-ray testing
8 Float removal flange
9 Drain plug
10 Additional drain flange, open
11 Float pipe top end finish
12 Vent plug
13 Counter flanges
14 Additional bracket
15 Float pipe seamless
16 Float

Technical specifications magnetic level gauge type ITA-3 Cryo

Principle:	Communicating tubes with magnetic float
Mounting position:	vertical
Measuring range:	**max. 5000 mm (one-part)** > 5000 mm 2- or multipart
Pipe diameter:	**60,3 x 2 mm welded,** **necking connection** or buttweld with T-pieces
Process connection:	to specify: **Flanges DN15…50 (1/2"…2" 150#),** **Welding or threaded stud**
Drain/Vent connections:	**Plug R1/2"** (for more please see order codes)
Pipe material:	**1.4404**; 1.4435; 1.4539; Hastelloy C4 (2.4610); Inconel 625 (2.4856); Inconel 825 (2.4858); Titan (3.7035) (other materials on request)
Flange material:	same as pipe material
Float material:	**1.4404** Titan, Titan/E-CTFE-coated
Operation temperature:	-200..+100 °C
Operation pressure:	max. 16 bar
Operation density:	min. 0,4017 kg/dm³
Viscosity:	max. 5000 mPa s
Bolts & Nuts:	**CS** (min. -10°C) SS or material in acc. with DIN 17280
Gasket	**PTFE min -150 °C** **Klingersil TOP Chem 2000**
Indication rail:	**Aluminium** 1.4301
Float types:	Cylindical, sealed type Length: **-270 mm***

Base equipment printed in bold letters!
***not for vaporizing media (e.g. ammonia)**

3.2.2 Order codes ITA-3 Cryo

Mag. Level Gauge
ITA-3-Cryo for cryogenic applications

Order codes for mag. level gauge type: ITA-3 Cryo

Code	Description
ITA-3-Cryo	**1. Float pipe welded Dimensions 60,3 x 2 mm**
	2. C to C distance
L	C to C distance in mm
	3. Design
0	without indication rail each 100 mm
1	Indication rail material: Aluminium max. 400 °C, each 100 mm
2	Indication rail material: 1.4401 max. 400 °C, each 100 mm
	4. Armaflex-Insulation
0	without insulation
F	Thickness: 12 mm, up to -15 °C
R	Thickness: 30 mm, up to -50 °C
T	Thickness: 70 mm, up to -200 °C, incl. Makrolon window
	5. C to C distance < 5000 mm
0	< 5000 mm - one part design
1	> 5000 mm - with flange connection; DN 32 PN 16, two or more parts design
2	> 5000 mm - with flange connection; DN 50 PN 16, two or more parts design
A	> 5000 mm - with flange connection; 2" ANSI 150 lbs, two or more parts design
	6. Process connection side/side
Y	Welding connection (please specify)
Z	Threaded connection (please specify)
1	Flanges DN 15 PN 16
2	Flanges DN 20 PN 16
3	Flanges DN 25 PN 16
4	Flanges DN 32 PN 16
5	Flanges DN 40 PN 16
6	Flanges DN 50 PN 16
A	Flanges 1/2" ANSI 150 lbs
B	Flanges 3/4" ANSI 150 lbs
C	Flanges 1" ANSI 150 lbs
D	Flanges 1 1/4" ANSI 150 lbs
E	Flanges 1 1/2" ANSI 150 lbs
F	Flanges 2" ANSI 150 lbs
	6.1 Surface side flanges
0	without
F	Surface groove (DIN2512)
H	Surface tongue (DIN2512)
G	groove large, ANSI B16.5
K	tongue large, ANSI B16.5

Mag. Level Gauge
ITA-3-Cryo for cryogenic applications

Order codes for mag. level gauge type: ITA-3 Cryo

Code	Description
	7. Side studs welded with T-pieces for 100 % X-ray testing
0	without
T	T-pieces
	8. Float removal flange (bottom side)
1	End cap (only if float removal flange (top side))
2	Flange DN 32 PN 16 incl. blind flange
3	Flange DN 50 PN 16 incl. blind flange
A	Flange 2" ANSI 150 lbs incl. blind flange
4	Flange DN 50 PN 16 reinforced for shut off valve on side
B	Flange 2" ANSI 150 lbs reinforced for shut off valve on side
	8.1 Surface float removal flange (bottom side) (only DN50 or 2")
0	without (Float removal flange (bottom side) = end cap or < DN50 or 2")
A	Standard- Surface Form C
B	Standard-Surface RF
C	Surface Form D Rz=40
D	Surface Form E Rz=16
E	Surface RFSF (smooth finished)
F	Surface groove (DIN2512)
G	Surface groove large
H	Surface tongue (DIN2512)
K	Surface tongue-large
L	Surface RTJ (ANSI) 1/2" bis 2"
	8.2 Bolts & nuts float removal flange (bottom side)
0	without (Float removal flange (bottom side) = end cap)
63	M16 x 65 mm; mat. zinced steel; flange DN 50 PN 16; DIN 931
64	M16 x 65 mm; mat. A2-70; flange DN 50 PN 16;K DIN 931
3X	M16 x 65 mm, PTFE-coated, flanges DN 50 PN 16
3A	5/8" x 83 mm;RF, mat. zinced steel A193B7/A1942H; flange 2" ANSI 150 lbs, ANSI B16.5
3B	5/8" x 83 mm;RF, mat. stainless steel A193B8 A1948M; flange 2" ANSI 150 lbs, ANSI B16.5
3C	5/8" x 95 mm;RTJ, mat. zinced steel A193B7/A1942H; flange 2" ANSI 150 lbs, ANSI B16.5
3D	5/8" x 95 mm;RTJ, mat. stainless steel A193B8 A1948M; flange 2" ANSI 150 lbs, ANSI B16.5
3T	5/8" x 83 mm;RF, mat.: PTFE coated, flange 2" 150 lbs
3V	5/8" x 95 mm;RTJ, mat.: PTFE coated, flange 2" 150 lbs
	9. Drain plug
0	without
1	Drain plug G 1/2" with soft iron gasket
4	Drain plug 1/2" NPT
5	Drain plug 3/4" NPT
6	Drain plug 1" NPT

Mag. Level Gauge
ITA-3-Cryo for cryogenic applications

Order codes for mag. level gauge type: ITA-3 Cryo

Code	Description
	10. Additional drain flange, open
0	without
1	Drain stud with flange DN 15 PN 16
2	Drain stud with flange DN 20 PN 16
3	Drain stud with flange DN 25 PN 16
4	Drain stud with flange DN 32 PN 16
5	Drain stud with flange DN 40 PN 16
A	Drain stud with flange 1/2" ANSI 150 lbs
B	Drain stud with flange 3/4" ANSI 150 lbs
C	Drain stud with flange 1" ANSI 150 lbs
D	Drain stud with flange 1 1/4" ANSI 150 lbs
E	Drain stud with flange 1 1/2" ANSI 150 lbs
	10.1 Surface open drain flange
0	without (Float removal flange (bottom side) = end cap or < DN50 or 2")
A	Standard- Surface Form C
B	Standard-Surface RF
C	Surface Form D Rz=40
D	Surface Form E Rz=16
E	Surface RFSF (smooth finished)
F	Surface groove (DIN2512)
G	Surface groove large
H	Surface tongue (DIN2512)
K	Surface tongue-large
L	Surface RTJ (ANSI) 1/2" bis 2"
	11. Float pipe top end finish
1	End cap
2	Flange with blind flange DN 32 PN 16
3	Flange with blind flange DN 50 PN 16
A	Flange with blind flange 2" ANSI 150 lbs
	11.1 Surface float pipe top end finish flange (only DN50 or 2")
0	without (Float removal flange (bottom side) = end cap or < DN50 or 2")
A	Standard- Surface Form C
B	Standard-Surface RF
C	Surface Form D Rz=40
D	Surface Form E Rz=16
E	Surface RFSF (smooth finished)
F	Surface groove (DIN2512)
G	Surface groove large
H	Surface tongue (DIN2512)
K	Surface tongue-large
L	Surface RTJ (ANSI) 1/2" bis 2"

Mag. Level Gauge
ITA-3-Cryo for cryogenic applications

Order codes for mag. level gauge type: ITA-3 Cryo

Code	Description
	11.2 Bolts & nuts float pipe top end finish flange (only DN50 or 2")
0	without (Float removal flange (bottom side) = end cap)
63	M16 x 65 mm; mat. zinced steel; flange DN 50 PN 16; DIN 931
64	M16 x 65 mm; mat. A2-70; flange DN 50 PN 16;K DIN 931
3X	M16 x 65 mm, PTFE-coated, flanges DN 50 PN 16
3A	5/8" x 83 mm;RF, mat. zinced steel A193B7/A1942H; flange 2" ANSI 150 lbs, ANSI B16.5
3B	5/8" x 83 mm;RF, mat. stainless steel A193B8 A1948M; flange 2" ANSI 150 lbs, ANSI B16.5
3C	5/8" x 95 mm;RTJ, mat. zinced steel A193B7/A1942H; flange 2" ANSI 150 lbs, ANSI B16.5
3D	5/8" x 95 mm;RTJ, mat. stainless steel A193B8 A1948M; flange 2" ANSI 150 lbs, ANSI B16.5
3T	5/8" x 83 mm;RF, mat.: PTFE coated, flange 2" 150 lbs
3V	5/8" x 95 mm;RTJ, mat.: PTFE coated, flange 2" 150 lbs
	12. Vent plug at top end
0	without
1	Vent plug G 1/2" with soft iron gasket
2	Vent plug 1/2" NPT
3	Vent plug 3/4" NPT
4	Vent plug 1" NPT
	12.1 Vent flange welded to end cap instead of vent plug
0	without
1	Flanged DN 15 PN 16 (socket weld construction to endcap)
2	Flanged DN 20 PN 16 (socket weld construction to endcap)
3	Flanged DN 25 PN 16 (socket weld construction to endcap)
4	Flanged DN 32 PN 16 (socket weld construction to endcap)
5	Flanged DN 40 PN 16 (socket weld construction to endcap)
6	Flanged DN 50 PN 16 (socket weld construction to endcap)
A	Flanged 1/2" ANSI 150 lbs (socket weld construction to endcap)
B	Flanged 3/4" ANSI 150 lbs (socket weld construction to endcap)
C	Flanged 1" ANSI 150 lbs (socket weld construction to endcap)
D	Flanged 1 1/4" ANSI 150 lbs (socket weld construction to endcap)
E	Flanged 1 1/2" ANSI 150 lbs (socket weld construction to endcap)
	12.2 Surface vent flange welded to end cap (only DN50 or 2")
0	without (Vent flange welded to end cap = without)
B	Surface RF
C	Surface Form D Rz=40
D	Surface Form E Rz=16
E	Surface RFSF (ANSI)
F	Surface groove (DIN2512)
G	Surface groove large ANSI
H	Surface tongue (DIN2512)
K	Surface tongue-large ANSI
L	Surface RTJ (ANSI) 1/2" bis 2"

Mag. Level Gauge
ITA-3-Cryo for cryogenic applications

Order codes for mag. level gauge type: ITA-3 Cryo

Code	Description
	13. Counter flanges
0	without
1	DN 15 PN 16
2	DN 20 PN 16
3	DN 25 PN 16
4	DN 32 PN 16
5	DN 40 PN 16
6	DN 50 PN 16
A	1/2" 150 lbs
B	3/4" 150 lbs
C	1" 150 lbs
D	1 1/4" 150 lbs
E	1 1/2" 150 lbs
F	2" 150 lbs
	13.1 Surface counter flanges
0	without (Counter flanges = without)
F	Surface groove (DIN2512)
H	Surface tongue (DIN2512)
	13.2 Bolts & Nuts counter flanges
0	without (Float removal flange (bottom side) = end cap)
63	M16 x 65 mm; mat. zinced steel; flange DN 50 PN 16; DIN 931
64	M16 x 65 mm; mat. A2-70; flange DN 50 PN 16;K DIN 931
3X	M16 x 65 mm, PTFE-coated, flanges DN 50 PN 16
3A	5/8" x 83 mm;RF, mat. zinced steel A193B7/A1942H; flange 2" ANSI 150 lbs, ANSI B16.5
3B	5/8" x 83 mm;RF, mat. stainless steel A193B8 A1948M; flange 2" ANSI 150 lbs, ANSI B16.5
3C	5/8" x 95 mm;RTJ, mat. zinced steel A193B7/A1942H; flange 2" ANSI 150 lbs, ANSI B16.5
3D	5/8" x 95 mm;RTJ, mat. stainless steel A193B8 A1948M; flange 2" ANSI 150 lbs, ANSI B16.5
3T	5/8" x 83 mm;RF, mat.: PTFE coated, flange 2" 150 lbs
3V	5/8" x 95 mm;RTJ, mat.: PTFE coated, flange 2" 150 lbs
	14. Additional bracket welded to the float pipe
0	without
H	Bracket
	15. Float pipe seamless
0	without
S	60,3 x 2 mm seamless; each 100 mm

Mag. Level Gauge
ITA-3-Cryo for cryogenic applications

Order codes for mag. level gauge type: ITA-3 Cryo

Code	Description					
	Floats					
	Pressure [bar]	Material	Diameter [mm]	min. Density [kg/dm³]	vented [Y/N]	notes
3C0240K1	16	Titanium	50,8	0,5723	N	without spacers, do not use for hydrogene or alcohol compounds
3C0500K1	16	Titanium	45	0,5509	N	with spacers, do not use for hydrogene or alcohol compounds
3C0500K3	16	Titanium	45	0,5038	N	with spacers, only with 316SS or Aluminium inication rail, do not use for hydrogene or alcohol compounds

3.2.2 Order code scheme for ITA-3 Cryo

1. Type of level gauge ITA-3 Cryo											
	2. C to C distance in mm [or inches]										
		3. Design									
			4. Armaflex insulation								
				5. C to C distance > 5000 mm							
					6. Process connection [side/side]						
						6.1 Surface side flanges					
							7. Side studs welded with T-pieces for 100 % X-ray-testing				
								8. Float removal flangeSurface float removal flange			
									8.1 Surface float removal flange		
										8.2 Bolts & nuts float removal flange	
											9. Drain plug
ITA-3-Cryo											

10. Additional drain flange, open													
	10.1 Surface open drain flange												
		11. Float pipe top end finish											
			11.1 Surface top end finish flange										
				11.2 Bolts and nuts rop end finish flange									
					12. Vent plug at top end								
						12.1 Vent flange welded to end cap instead of vent plug							
							12.2 Surface vent flange						
								13. Counter flanges					
									13.1 Surface counter flanges				
										13.2 Bolts & nuts counter flanges			
											14. Additional bracket welded to the float pipe		
												15. Float pipe seamless	
													16. Float

3.3.1 ITA-3 CR64

Characteristics: PN16 / Float pipe and flange material: 1.4404

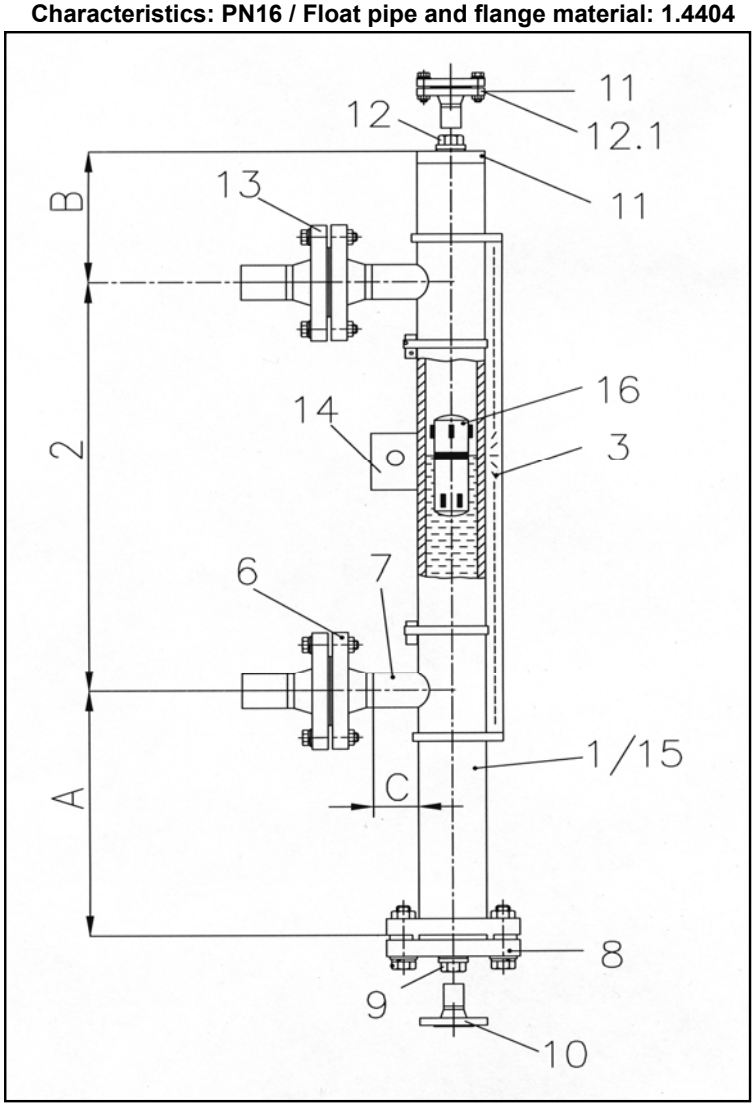

Key:

1 Float pipe welded, dimensions 64 x 2 mm
2 c to c distance
3 Design (indication rail)
4 Armaflex® insulation
6 Process connection side/side
7 Side studs welded with T pieces for 100 % X-ray testing
8 Float removal flange
9 Drain plug
10 Additional drain flange, open
11 Float pipe top end finish
12 Vent plug
13 Counter flanges
14 Additional bracket
15 Float pipe seamless
16 Float

Technical specifications magnetic level gauge type ITA-3 CR64

Principle:	Communicating tubes with magnetic float
Mounting position:	vertical
Measuring range:	**max. 5000 mm (one-part)** > 5000 mm 2- or multipart
Pipe diameter:	**64 x 2 mm welded,**
Process connection:	to specify: **Flanges DN15…50 (1/2"…2" 150#),** **Welding or threaded stud**
Drain/Vent connections:	**Plug G1/2"** (for more please see order codes)
Pipe material:	**1.4404**; 1.4435; 1.4539; Hastelloy C4 (2.4610); Inconel 625 (2.4856); Inconel 825 (2.4858); Titan (3.7035) (other materials on request)
Flange material:	same as pipe material
Float material:	**1.4404** Titan, Titan/E-CTFE-coated
Operation temperature:	-200..+100 °C
Operation pressure:	max. 16 bar
Operation density:	min. 0,4017 kg/dm³
Viscosity:	max. 5000 mPa s
Bolts & Nuts:	**CS** (min. -10°C) SS or material in acc. with DIN 17280
Gasket	**PTFE min -150 °C** **Klingersil TOP Chem 2000**
Indication rail:	**Aluminium** 1.4301
Float types:	Cylindical, sealed type Length: **-∅50,8 x 270 mm*** -∅50,8 x 530 mm

Base equipment printed in bold letters!
***For use with vaporizing media (e.g. ammonia)**

3.3.2 Order codes ITA-3 CR64

Mag. Level Gauge
ITA-3 CR64 for cryogenic applications
Float pipe and flange material 1.4404

Order codes for mag. level gauge type ITA-3-CR64 for cryogenic applications

Code	Description
ITA-3 CR64	**1. Float pipe welded Dimensions 64 x 2 mm**
	2. C to C distance
L	C to C distance in mm
	3. Design
0	without indication rail each 100 mm
1	Indication rail material: Aluminium max. 400 °C, each 100 mm
2	Indication rail material: 1.4401 max. 400 °C, each 100 mm
	4. Armaflex-Insulation
0	without insulation
F	Thickness: 12 mm, up to -15 °C
R	Thickness: 30 mm, up to -50 °C
T	Thickness: 70 mm, up to -200 °C, incl. Makrolon window
	5. C to C distance < 5000 mm
A	< 5000 mm - without flange connection; DN 32 PN 16
B	> 5000 mm - with flange connection; DN 32 PN 16
	6. Process connection side/side
Y	Welding connection (please specify)
Z	Threaded connection (please specify)
1	Flanges DN 15 PN 16
2	Flanges DN 20 PN 16
3	Flanges DN 25 PN 16
4	Flanges DN 32 PN 16
5	Flanges DN 40 PN 16
6	Flanges DN 50 PN 16
A	Flanges 1/2" ANSI 150 lbs
B	Flanges 3/4" ANSI 150 lbs
C	Flanges 1" ANSI 150 lbs
D	Flanges 1 1/4" ANSI 150 lbs
E	Flanges 1 1/2" ANSI 150 lbs
F	Flanges 2" ANSI 150 lbs
	6.1 Surface side flanges
0	without
F	Surface groove (DIN2512)
H	Surface tongue (DIN2512)
	7. Side studs welded with T-pieces for 100 % X-ray testing
0	without
T	T-pieces
	8. Float removal flange (bottom side)
1	End cap (only if float removal flange (top side))
2	Flange DN 32 PN 16 incl. blind flange
3	Flange DN 50 PN 16 incl. blind flange
A	Flange 2" ANSI 150 lbs incl. blind flange
4	Flange DN 50 PN 16 reinforced for shut off valve on side
B	Flange 2" ANSI 150 lbs reinforced for shut off valve on side

Mag. Level Gauge
ITA-3 CR64 for cryogenic applications
Float pipe and flange material 1.4404

Order codes for mag. level gauge type ITA-3-CR64 for cryogenic applications

Code	Description
	8.1 Surface float removal flange (bottom side) (only DN50 or 2")
0	without (Float removal flange (bottom side) = end cap or < DN50 or 2")
A	Standard- Surface Form C
B	Standard-Surface RF
C	Surface Form D Rz=40
D	Surface Form E Rz=16
E	Surface RFSF (smooth finished)
F	Surface groove (DIN2512)
G	Surface groove large
H	Surface tongue (DIN2512)
K	Surface tongue-large
L	Surface RTJ (ANSI) 1/2" bis 2"
	8.2 Bolts & nuts float removal flange (bottom side)
0	without (Float removal flange (bottom side) = end cap)
63	M16 x 65 mm; mat. zinced steel; flange DN 50 PN 16; DIN 931
64	M16 x 65 mm; mat. A2-70; flange DN 50 PN 16;K DIN 931
3X	M16 x 65 mm, PTFE-coated, flanges DN 50 PN 16
3A	5/8" x 83 mm;RF, mat. zinced steel A193B7/A1942H; flange 2" ANSI 150 lbs, ANSI B16.5
3B	5/8" x 83 mm;RF, mat. stainless steel A193B8 A1948M; flange 2" ANSI 150 lbs, ANSI B16.5
3C	5/8" x 95 mm;RTJ, mat. zinced steel A193B7/A1942H; flange 2" ANSI 150 lbs, ANSI B16.5
3D	5/8" x 95 mm;RTJ, mat. stainless steel A193B8 A1948M; flange 2" ANSI 150 lbs, ANSI B16.5
3T	5/8" x 83 mm;RF, mat.: PTFE coated, flange 2" 150 lbs
3V	5/8" x 95 mm;RTJ, mat.: PTFE coated, flange 2" 150 lbs
	9. Drain plug
0	without
1	Drain plug G 1/2" with soft iron gasket
2	Drain plug 1/2" NPT
3	Drain plug 3/4" NPT
4	Drain plug 1" NPT
	10. Additional drain flange, open
0	without
1	Drain stud with flange DN 15 PN 16
2	Drain stud with flange DN 20 PN 16
3	Drain stud with flange DN 25 PN 16
4	Drain stud with flange DN 32 PN 16
5	Drain stud with flange DN 40 PN 16
6	Drain stud with flange DN 50 PN 16
A	Drain stud with flange 1/2" ANSI 150 lbs
B	Drain stud with flange 3/4" ANSI 150 lbs
C	Drain stud with flange 1" ANSI 150 lbs
D	Drain stud with flange 1 1/4" ANSI 150 lbs
E	Drain stud with flange 1 1/2" ANSI 150 lbs
F	Drain stud with flange 2" ANSI 150 lbs

Mag. Level Gauge
ITA-3 CR64 for cryogenic applications
Float pipe and flange material 1.4404

Order codes for mag. level gauge type ITA-3-CR64 for cryogenic applications

Code	Description
	10.1 Surface open drain flange
0	without (Float removal flange (bottom side) = end cap or < DN50 or 2")
A	Standard- Surface Form C
B	Standard-Surface RF
C	Surface Form D Rz=40
D	Surface Form E Rz=16
E	Surface RFSF (smooth finished)
F	Surface groove (DIN2512)
G	Surface groove large
H	Surface tongue (DIN2512)
K	Surface tongue-large
L	Surface RTJ (ANSI) 1/2" bis 2"
	11. Float pipe top end finish
1	End cap
2	Flange with blind flange DN 32 PN 16
3	Flange with blind flange DN 50 PN 16
A	Flange with blind flange 2" ANSI 150 lbs
	11.1 Surface float pipe top end finish flange (only DN50 or 2")
0	without (Float removal flange (bottom side) = end cap or < DN50 or 2")
A	Standard- Surface Form C
B	Standard-Surface RF
C	Surface Form D Rz=40
D	Surface Form E Rz=16
E	Surface RFSF (smooth finished)
F	Surface groove (DIN2512)
G	Surface groove large
H	Surface tongue (DIN2512)
K	Surface tongue-large
L	Surface RTJ (ANSI) 1/2" bis 2"
	11.2 Bolts & nuts float pipe top end finish flange (only DN50 or 2")
0	without (Float removal flange (bottom side) = end cap)
63	M16 x 65 mm; mat. zinced steel; flange DN 50 PN 16; DIN 931
64	M16 x 65 mm; mat. A2-70; flange DN 50 PN 16;K DIN 931
3X	M16 x 65 mm, PTFE-coated, flanges DN 50 PN 16
3A	5/8" x 83 mm;RF, mat. zinced steel A193B7/A1942H; flange 2" ANSI 150 lbs, ANSI B16.5
3B	5/8" x 83 mm;RF, mat. stainless steel A193B8 A1948M; flange 2" ANSI 150 lbs, ANSI B16.5
3C	5/8" x 95 mm;RTJ, mat. zinced steel A193B7/A1942H; flange 2" ANSI 150 lbs, ANSI B16.5
3D	5/8" x 95 mm;RTJ, mat. stainless steel A193B8 A1948M; flange 2" ANSI 150 lbs, ANSI B16.5
3T	5/8" x 83 mm;RF, mat.: PTFE coated, flange 2" 150 lbs
3V	5/8" x 95 mm;RTJ, mat.: PTFE coated, flange 2" 150 lbs
	12. Vent plug at top end
0	without
1	Vent plug G 1/2" with soft iron gasket
2	Vent plug 1/2" NPT
3	Vent plug 3/4" NPT
4	Vent plug 1" NPT

Mag. Level Gauge
ITA-3 CR64 for cryogenic applications
Float pipe and flange material 1.4404

Order codes for mag. level gauge type ITA-3-CR64 for cryogenic applications

Code	Description
	12.1 Vent flange welded to end cap instead of vent plug
0	without
1	Flanged DN 15 PN 16 (socket weld construction to endcap)
2	Flanged DN 20 PN 16 (socket weld construction to endcap)
3	Flanged DN 25 PN 16 (socket weld construction to endcap)
4	Flanged DN 32 PN 16 (socket weld construction to endcap)
5	Flanged DN 40 PN 16 (socket weld construction to endcap)
6	Flanged DN 50 PN 16 (socket weld construction to endcap)
A	Flanged 1/2" ANSI 150 lbs (socket weld construction to endcap)
B	Flanged 3/4" ANSI 150 lbs (socket weld construction to endcap)
C	Flanged 1" ANSI 150 lbs (socket weld construction to endcap)
D	Flanged 1 1/4" ANSI 150 lbs (socket weld construction to endcap)
E	Flanged 1 1/2" ANSI 150 lbs (socket weld construction to endcap)
	12.2 Surface vent flange welded to end cap (only DN50 or 2")
0	without (Vent flange welded to end cap = without)
A	Surface RF
B	Surface Form D Rz=40
C	Surface Form E Rz=16
D	Surface RFSF (ANSI)
E	Surface groove (DIN2512)
F	Surface groove large ANSI
G	Surface tongue (DIN2512)
H	Surface tongue-large ANSI
K	Surface RTJ (ANSI) 1/2" bis 2"
L	Dichtfläche RTJ (ANSI)
	13. Counter flanges
0	without
1	DN 15 PN 16
2	DN 20 PN 16
3	DN 25 PN 16
4	DN 32 PN 16
5	DN 40 PN 16
6	DN 50 PN 16
A	1/2" 150 lbs
B	3/4" 150 lbs
C	1" 150 lbs
D	1 1/4" 150 lbs
E	1 1/2" 150 lbs
F	2" 150 lbs
	13.1 Surface counter flanges
0	without (Counter flanges = without)
F	Surface groove (DIN2512)
H	Surface tongue (DIN2512)

Mag. Level Gauge
ITA-3 CR64 for cryogenic applications
Float pipe and flange material 1.4404

Order codes for mag. level gauge type ITA-3-CR64 for cryogenic applications

Code	Description
	13.2 Bolts & Nuts counter flanges
0	without (Float removal flange (bottom side) = end cap)
63	M16 x 65 mm; mat. zinced steel; flange DN 50 PN 16; DIN 931
64	M16 x 65 mm; mat. A2-70; flange DN 50 PN 16;K DIN 931
3X	M16 x 65 mm, PTFE-coated, flanges DN 50 PN 16
3A	5/8" x 83 mm;RF, mat. zinced steel A193B7/A1942H; flange 2" ANSI 150 lbs, ANSI B16.5
3B	5/8" x 83 mm;RF, mat. stainless steel A193B8 A1948M; flange 2" ANSI 150 lbs, ANSI B16.5
3C	5/8" x 95 mm;RTJ, mat. zinced steel A193B7/A1942H; flange 2" ANSI 150 lbs, ANSI B16.5
3D	5/8" x 95 mm;RTJ, mat. stainless steel A193B8 A1948M; flange 2" ANSI 150 lbs, ANSI B16.5
3T	5/8" x 83 mm;RF, mat.: PTFE coated, flange 2" 150 lbs
3V	5/8" x 95 mm;RTJ, mat.: PTFE coated, flange 2" 150 lbs
	14. Additional bracket welded to the float pipe
0	without
H	Bracket
	15. Float pipe seamless
0	without
S	60,3 x 2 mm seamless; each 100 mm

Mag. Level Gauge
ITA-3 CR64 for cryogenic applications
Float pipe and flanges material: 1.4404

Order codes for mag. Level Gauges type: ITA-3-Cryo

	Description						
Floats							
Code	**Pressure [bar]**	**Material**	**Diameter [mm]**	**Length [mm]**	**min. Density [kg/dm³]**	**vented [Y/N]**	**Notes**
3C0501K1	16	Titanium	50,8	525	0,4017	N	with spacers; do not use for hydrogen or alcohol compounds
3C0501K2	16	Titanium	50,8	525	0,389	N	with spacers; do not use for hydrogen or alcohol compounds

For additional accessories please refer to the chapters "Special equipment" and "Electrical accessories and Switches"

3.3.2 Order code scheme for ITA-3 Cryo

1. Type of level gauge ITA-3 CR64											
	2. C to C distance in mm [or inches]										
		3. Design									
			4. Armaflex insulation								
				5. C to C distance > 5000 mm							
					6. Process connection [side/side]						
						6.1 Surface side flanges					
							7. Side studs welded with T-pieces for 100 % X-ray-testing				
								8. Float removal flangeSurface float removal flange			
									8.1 Surface float removal flange		
										8.2 Bolts & nuts float removal flange	
											9. Drain plug
ITA-3-CR64											

10. Additional drain flange, open													
	10.1 Surface open drain flange												
		11. Float pipe top end finish											
			11.1 Surface top end finish flange										
				11.2 Bolts and nuts rop end finish flange									
					12. Vent plug at top end								
						12.1 Vent flange welded to end cap instead of vent plug							
							12.2 Surface vent flange						
								13. Counter flanges					
									13.1 Surface counter flanges				
										13.2 Bolts & nuts counter flanges			
											14. Additional bracket welded to the float pipe		
												15. Float pipe seamless	
													16. Float

3.4.1 ITA-3.5

Characteristics: PN16 / Float pipe and flange material: 1.4404 (wetted parts E-CTFE-coated)

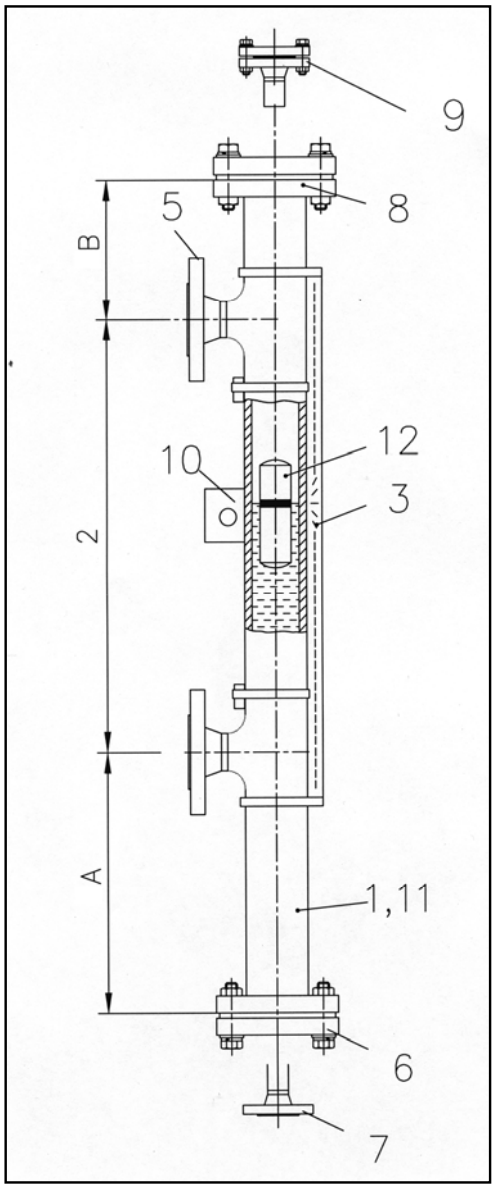

Key:

1 Float pipe welded, dimensions 60,3 x 2 mm
2 c to c distance
3 Design (indication rail)
5 Process connection side/side
6 Float removal flange
7 Additional drain flange, open
8 Float pipe top end finish
9 Additional bracket
10 Float pipe seamless
11 Vent plug
12 Float

Technical specifications magnetic level gauge type ITA-3.5

Principle:	Communicating tubes with magnetic float
Mounting position:	vertical
Measuring range:	**max. 3100 mm** (one-part, total length max. 3500 mm) > 3100 mm 2- or multipart
Pipe diameter:	**60,3 x 2 mm welded**
Process connection:	to specify: **Flanges DN15…50 (1/2"…2" 150#),** **Welding or threaded stud**
Drain/Vent connections:	**see order codes**
Pipe material:	**1.4404 (wetted parts E-CTFE coated)**
Flange material:	same as pipe material
Float material:	Titanium/E-CTFE-coated
Operation temperature:	-50..+160 °C
Operation pressure:	max. 16 bar
Operation density:	min. 0,5645 kg/dm³
Viscosity:	max. 5000 mPa s
Bolts & Nuts:	**CS** SS
Gasket	**PTFE min -150 °C** **Klingersil TOP Chem 2000**
Indication rail:	**Aluminium** 1.4301
Float types:	Cylindical, sealed type Length: **-270 mm** -130 mm
Standard dimensions:	-A = 240 mm* -B = 130 mm

Base equipment printed in bold letters!
***for densities < 1,0 kg/dm³ enlarge the scale A**

3.4.2 Order codes ITA-3.5

Mag. Level Gauge
ITA-3.5 PN16/150 lbs
Float pipe and flange material 1.4404
wetted parts E-CTFE-coated (Halar)

Order codes for mag. level gauge type ITA- 3.5 PN16/150 lbs

Code	Description
ITA-3.5	**1. Float pipe welded Dimensions 60,3 x 2 mm**
	2. c to c distance
L	c to c distance in mm
	3. Design
0	without indication rail each 100 mm
1	Indication rail material Aluminium max. 160 °C, each 100 mm
2	Indication rail material 1.4401 max. 160 °C, each 100 mm
	4. c to c distance < 3100 mm, total length 3500 mm
A	< 3100 mm - without flange connection; 1-part-constrution
B	> 3100 mm - with flange connection; DN 50 PN 16 / 2"ANSI 150# (two or more parts construction)
	5. Process connection side/side
1	Flanges DN 20 PN 16
2	Flanges DN 25 PN 16
3	Flanges DN 32 PN 16
4	Flanges DN 40 PN 16
5	Flanges DN 50 PN 16
A	Flanges 3/4" ANSI 150 lbs
B	Flanges 1" ANSI 150 lbs
C	Flanges 1 1/4" ANSI 150 lbs
D	Flanges 1 1/2" ANSI 150 lbs
E	Flanges 2" ANSI 150 lbs
	5.1 Surface side flanges
0	without
A	Surface Form C
B	Surface RF
	6. Float removal flange
0	without
A	Flange DN 50 PN 16 incl. blind flange
1	Flange 2" ANSI 150 lbs incl. blind flange
	6.1 Surface side flanges
0	without
A	Surface Form C
B	Surface RF
	6.2 Bolts & nuts float removal flange (bottom side)
0	without
63	M16 x 65 mm; mat. zinced steel; flange DN 32 PN 16; DIN 931
64	M16 x 65 mm; mat. A2-70; flange DN 32 PN 16; DIN 931
3X	M16 x 65 mm; mat. PTFE-coated; flange DN 50 PN 16
3A	5/8" x 83; mat. zinced steel A193B7/A1942H; flange 2" ANSI 150 lbs; ANSI B16.5
3B	5/8" x 83; mat. stainless steel A193B8 A1948M; flange 2" ANSI 150 lbs; ANSI B16.5
3T	5/8" x 83; mat. PTFE coated; flange 2" ANSI 150 lbs

Mag. Level Gauge
ITA-3.5 PN16/150 lbs
Float pipe and flange material 1.4404

Order codes for mag. level gauge type ITA- 3.5 PN16/150 lbs

Code	Description
	7. Additional drain flange, open
0	without
1	Drain stud with flange DN 20 PN 16
2	Drain stud with flange DN 25 PN 16
3	Drain stud with flange DN 32 PN 16
4	Drain stud with flange DN 40 PN 16
A	Drain stud with flange 3/4" ANSI 150 lbs
B	Drain stud with flange 1" ANSI 150 lbs
C	Drain stud with flange 1 1/4" ANSI 150 lbs
D	Drain stud with flange 1 1/2" ANSI 150 lbs
	8. Float pipe top end finish
2	Flange with blind flange DN 50 PN 16
A	Flange with blind flange 2" ANSI 150 lbs
	8.1 Float pipe top end finish with concentric reducer (X-ray testing)
0	without
1	DN 20 PN 16
2	DN 25 PN 16
3	DN 32 PN 16
4	DN 40 PN 16
A	3/4" ANSI 150 lbs
B	1" ANSI 150 lbs
C	1 1/4" ANSI 150 lbs
D	1 1/2" ANSI 150 lbs
	8.2 Surface float pipe top end finish flange (only DN50 or 2")
A	Dichtleiste Form C
B	Dichtleiste RF
	8.3 Bolts & nuts float pipe top end finish flange (only DN50 or 2")
0	without
63	M16 x 65 mm; mat. zinced steel; flange DN 32 PN 16; DIN 931
64	M16 x 65 mm; mat. A2-70; flange DN 32 PN 16; DIN 931
3X	M16 x 65 mm; mat. PTFE-coated; flange DN 50 PN 16
3A	5/8" x 83; mat. zinced steel A193B7/A1942H; flange 2" ANSI 150 lbs; ANSI B16.5
3B	5/8" x 83; mat. stainless steel A193B8 A1948M; flange 2" ANSI 150 lbs; ANSI B16.5
3T	5/8" x 83; mat. PTFE coated; flange 2" ANSI 150 lbs
	9.1 Vent flange with concentric reducer (X-ray testing)
0	without
1	DN 20 PN 16
2	DN 25 PN 16
3	DN 32 PN 16
4	DN 40 PN 16
A	3/4" ANSI 150 lbs
B	1" ANSI 150 lbs
C	1 1/4" ANSI 150 lbs
D	1 1/2" ANSI 150 lbs

Mag. Level Gauge
ITA-3.5 PN16/150 lbs
Float pipe and flange material 1.4404

Order codes for mag. level gauge type ITA- 3.5 PN16/150 lbs

Code	Description
	10. Additional bracket welded to the float pipe
0	without
H	Bracket
	11. Float pipe seamless
0	without
S	60,3 x 2 mm seamless; each 100 mm

Mag. Level Gauge
ITA-3.5 PN16/150 lbs
Float pipe and flanges material: 1.4404
wetted parts E-CTFE-coated (Halar)

Order codes for mag. Level Gauges type: ITA-3.5 PN16/150 lbs

	Description						
Floats							
Code	**Pressure [bar]**	**Material**	**Diameter [mm]**	**Length [mm]**	**min. Density [kg/dm³]**	**vented [Y/N]**	**Notes**
35H024K1	16	Titanium, Halar-coated	52	240	0,6873	N	
35H024K3	16	Titanium, Halar-coated	52	240	0,5645	N	only with 316SS or Aluminium indication rail

For additional accessories please refer to the chapters "Special equipment" and "Electrical accessories and Switches"

3.4.2 Order scheme ITA-3.5

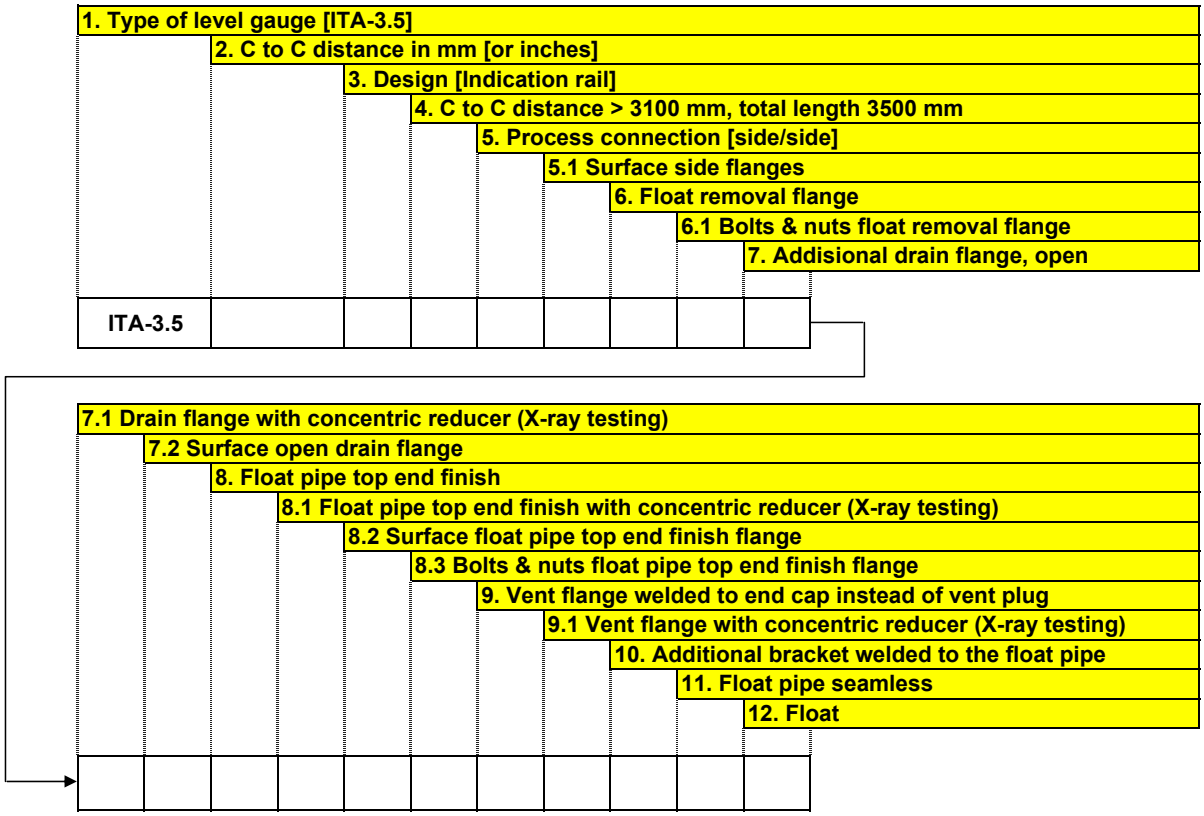

3.5.1 ITA-3.8

Characteristics:
Float pipe and flange material 1.4404
wetted parts E-TFE-lined
applicable for vacuum service

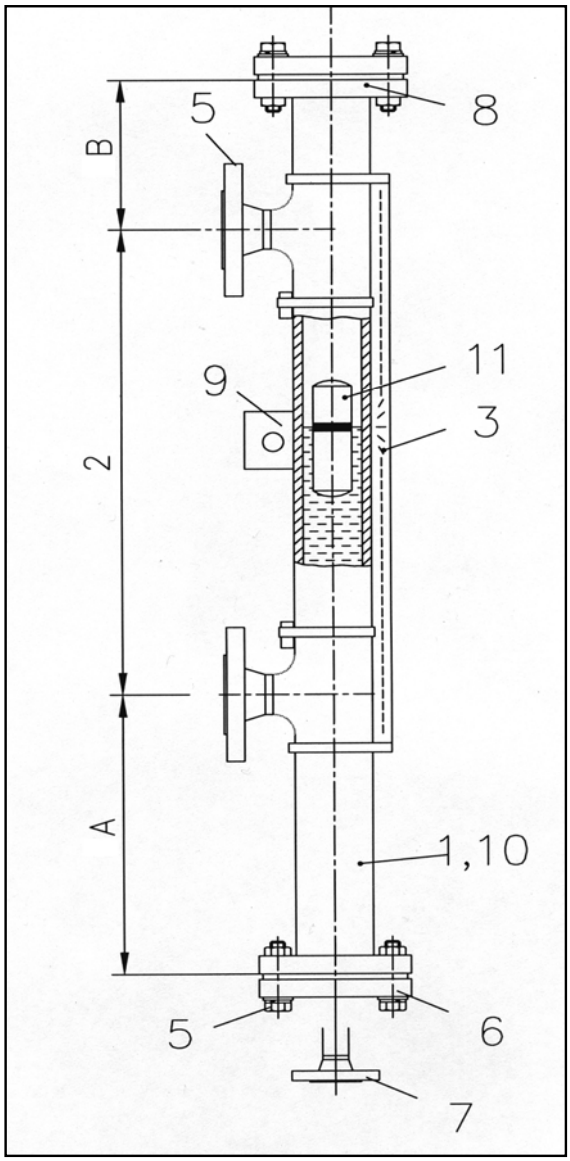

Key:

1 Float pipe welded, dimensions 60,3 x 2 mm
2 c to c distance
3 Design (indication rail)
5 Process connection side/side
6 Float removal flange
7 Additional drain flange, open
8 Float pipe top end finish
9 Additional bracket
10 Float pipe seamless
11 Vent plug
12 Float

Technical specifications magnetic level gauge type ITA-3.8

Principle:	Communicating tubes with magnetic float
Mounting position:	vertical
Measuring range:	**max. 1700 mm** (one-part, total length max. 2100 mm) > 1700 mm 2- or multipart
Pipe diameter:	**64 x 2 mm welded**
Process connection:	to specify: **Flanges DN15…50 (1/2"…2" 150#),**
Drain/Vent connections:	**see order codes**
Pipe material:	**1.4404 (wetted parts E-TFE lined)**
Thickness of lining:	min. 3,27 mm
Flange material:	same as pipe material
Float material:	Titanium/E-TFE-coated
Operation temperature:	-50..+160 °C
Operation pressure:	max. 16 bar / vacuum resistant
Operation density:	min. 0,6873 kg/dm³
Viscosity:	max. 5000 mPa s
Bolts & Nuts:	**CS** SS
Gasket	**PTFE up to 100 °C** **Klingersil-chem-200 up to 260 °C**
Indication rail:	**Makrolon up to 120 °C** Aluminium up to 400 °C 1.4301 up to 400 °C
Float types:	Cylindical, sealed type Length: **-270 mm** -150 mm
Standard dimensions:	-A = 240 mm* -B = 130 mm

Base equipment printed in bold letters!
***for densities < 1,0 kg/dm³ enlarge the scale A**

3.5.2 Order codes ITA-3.8

Mag. Level Gauge
ITA-3.8 PN16/150 lbs
Float pipe and flange material 1.4404
wetted parts E-TFE-lined
applicable for vacuum service

Order codes for mag. level gauges type ITA- 3 PN16/150 lbs

Code	Description
ITA-3.8	**1. Float pipe welded Dimensions 64 x 2 mm**
	2. c to c distance
L	c to c distance in mm
	3. Design
0	without indication rail each 100 mm
1	Indication rail material: Makrolon, max. 120 °C, each 100 mm
2	Indication rail material: Aluminium max. 400 °C, each 100 mm
3	Indication rail material: 1.4401 max. 400 °C, each 100 mm
	4. c to c distance < 1700 mm, total length 2100 mm
A	< 1700 mm - without flange connection; one-part-construction
B	> 1700 mm - with flange connection; DN 32 PN 16 (two or more parts construction)
	5. Process connection side/side
1	Flanges DN 20 PN 16
2	Flanges DN 25 PN 16
3	Flanges DN 32 PN 16
4	Flanges DN 40 PN 16
5	Flanges DN 50 PN 16
A	Flanges 3/4" ANSI 150 lbs
B	Flanges 1" ANSI 150 lbs
C	Flanges 1 1/4" ANSI 150 lbs
D	Flanges 1 1/2" ANSI 150 lbs
E	Flanges 2" ANSI 150 lbs
	5.1 Surface side flanges
0	without
A	Surface Form C
B	Surface RF
	6. Float removal flange
0	without
A	Flange DN 50 PN 16 incl. blind flange
1	Flange 2" ANSI 150 lbs incl. blind flange
	6.1 Surface Float removal flange (bottom side)
A	Standard- Surface Form C
B	Standard-Surface RF
	6.2 Bolts & nuts float removal flange (bottom side)
0	without
63	M16 x 65 mm; mat. zinced steel; flange DN 32 PN 16; DIN 931
64	M16 x 65 mm; mat. A2-70; flange DN 32 PN 16; DIN 931
3X	M16 x 65 mm; mat. PTFE-coated; flange DN 50 PN 16
3A	5/8" x 83; mat. zinced steel A193B7/A1942H; flange 2" ANSI 150 lbs; ANSI B16.5
3B	5/8" x 83; mat. stainless steel A193B8 A1948M; flange 2" ANSI 150 lbs; ANSI B16.5
3T	5/8" x 83; mat. PTFE coated; flange 2" ANSI 150 lbs

Mag. Level Gauge
ITA-3.8 PN16/150 lbs
Float pipe and flange material 1.4404
wetted parts E-TFE-lined
applicable for vacuum service

Order codes for mag. level gauges type ITA- 3 PN16/150 lbs

Code	Description
	7. Additional drain flange, open
0	without
1	Drain stud with flange DN 20 PN 16
2	Drain stud with flange DN 25 PN 16
3	Drain stud with flange DN 32 PN 16
4	Drain stud with flange DN 40 PN 16
A	Drain stud with flange 3/4" ANSI 150 lbs
B	Drain stud with flange 1" ANSI 150 lbs
C	Drain stud with flange 1 1/4" ANSI 150 lbs
D	Drain stud with flange 1 1/2" ANSI 150 lbs
	8. Vent flange welded to blind flange
0	without
1	Flanged DN 15 PN 16 (socket weld construction to blind flange)
2	Flanged DN 20 PN 16 (socket weld construction to blind flange)
3	Flanged DN 25 PN 16 (socket weld construction to blind flange)
4	Flanged DN 32 PN 16 (socket weld construction to blind flange)
5	Flanged DN 40 PN 16 (socket weld construction to blind flange)
6	Flanged DN 50 PN 16 (socket weld construction to blind flange)
A	Flanged 1/2" ANSI 150 lbs (socket weld construction to blind flange)
B	Flanged 3/4" ANSI 150 lbs (socket weld construction to blind flange)
C	Flanged 1" ANSI 150 lbs (socket weld construction to blind flange)
D	Flanged 1 1/4" ANSI 150 lbs (socket weld construction to blind flange)
E	Flanged 1 1/2" ANSI 150 lbs (socket weld construction to blind flange)
F	Flanged 2" ANSI 150 lbs (socket weld construction to blind flange)
	8.1 Surface vent flange
0	without
A	Standard- Surface Form C
B	Standard-Surface RF
	8.2 Bolts & Nuts vent flange
0	without
63	M16 x 65 mm; mat. zinced steel; flange DN 32 PN 16; DIN 931
64	M16 x 65 mm; mat. A2-70; flange DN 32 PN 16; DIN 931
3X	M16 x 65 mm; mat. PTFE-coated; flange DN 50 PN 16
3A	5/8" x 83; mat. zinced steel A193B7/A1942H; flange 2" ANSI 150 lbs; ANSI B16.5
3B	5/8" x 83; mat. stainless steel A193B8 A1948M; flange 2" ANSI 150 lbs; ANSI B16.5
3T	5/8" x 83; mat. PTFE coated; flange 2" ANSI 150 lbs
	9. Additional bracket welded to the float pipe
0	without
H	Bracket
	10. Float pipe seamless
0	without
S	64 x 2 mm seamless; each 100 mm

Mag. Level Gauge
ITA-3.8 PN16/150 lbs
Float pipe and flanges material: 1.4404
wetted parts ETFE-lined
applicable for vacuum service

Order codes for mag. Level Gauges type: ITA-3.5 PN16/150 lbs

	Description						
Floats							
Code	**Pressure [bar]**	**Material**	**Diameter [mm]**	**Length [mm]**	**min. Density [kg/dm³]**	**vented [Y/N]**	**Notes**
34PVD1K1	10	PVDF	50	135	1,3000	N	
34PVD2K1	10	PVDF	50	255	0,8500	N	

For additional accessories please refer to the chapters "Special equipment" and "Electrical accessories and Switches"

3.5.2 Order codes ITA-3.8

1. Type of Level Gauge [ITA-3.8]	2. C to C distance in mm [or inches]	3. Design [Indication rail]	4. C to C distance > 1700 mm, total length 2100 mm	5. Process connection [side/side]	5.1 Surface side flanges	6. Float removal flange	6.1 Surface float removal flange	6.2 Bolts & nuts float removal flange
ITA-3.8								

7. Additional drain flange, open	7.1 Surface open drain flange	7.2 Bolts & nuts open drain flange	8. Vent flange welded to blind flange	8.1 Surface vent flange	8.2 Bolts & nuts vent flange	9. Additional bracket welded to the float pipe	10. Float pipe seamless	11. Float

3.6.1 ITA-4

Characteristics: PN16 / Float pipe and flange material: 1.4404
(mounted from top of tank)

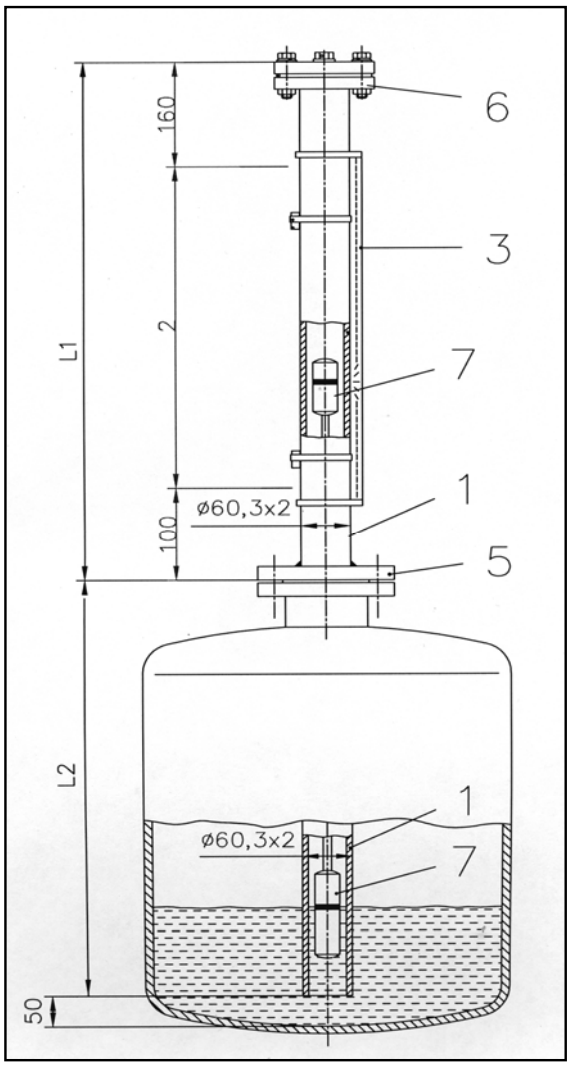

Key:

1 Float pipe welded, dimensions 60,3 x 2 mm
2 Measuring length
3 Design (indication rail)
5 Process connection on tank
6 Follower magnet giude tube top side finish
7 Float with rod and follower magnet

Technical specifications magnetic level gauge type ITA-4

Principle:	Communicating tubes with magnetic float
Mounting position:	Top of tank
Measuring range:	**max. 2750 mm** (depending on fluid's density)
Pipe diameter:	**60,3 x 2 mm welded,** **necking connections**
Process connection:	to specify: **Flanges DN50 PN 16 pr 2" 150#**
Drain/Vent connections:	**Plug R1/2"**
Pipe material:	**1.4404**; 1.4435; 1.4539; Hastelloy C4 (2.4610); Inconel 625 (2.4856); Inconel 825 (2.4858); Titan (3.7035) (other materials on request)
Flange material:	same as pipe material
Float material:	**1.4404** Titan, Titan/E-CTFE-coated
Operation temperature:	-50..+400 °C
Operation pressure:	max. 16 bar
Operation density:	min. 0,68 kg/dm³
Viscosity:	max. 5000 mPa s
Bolts & Nuts:	**CS** SS
Gasket	**PTFE up to 100 °C** **Klingersil C4400 up to 175 °C** **Graphit spiral wound up to 400 °C**
Indication rail:	**Makrolon up to 120 °C** Aluminium up to 400 °C 1.4301 up to 400 °C
Float types:	Cylindical, sealed type, with rod

Base equipment printed in bold letters!

3.6.2 ITA-4.0

Characteristics: PN16 / Float pipe: 1.4404 and flanges : CS
(mounted from top of tank)

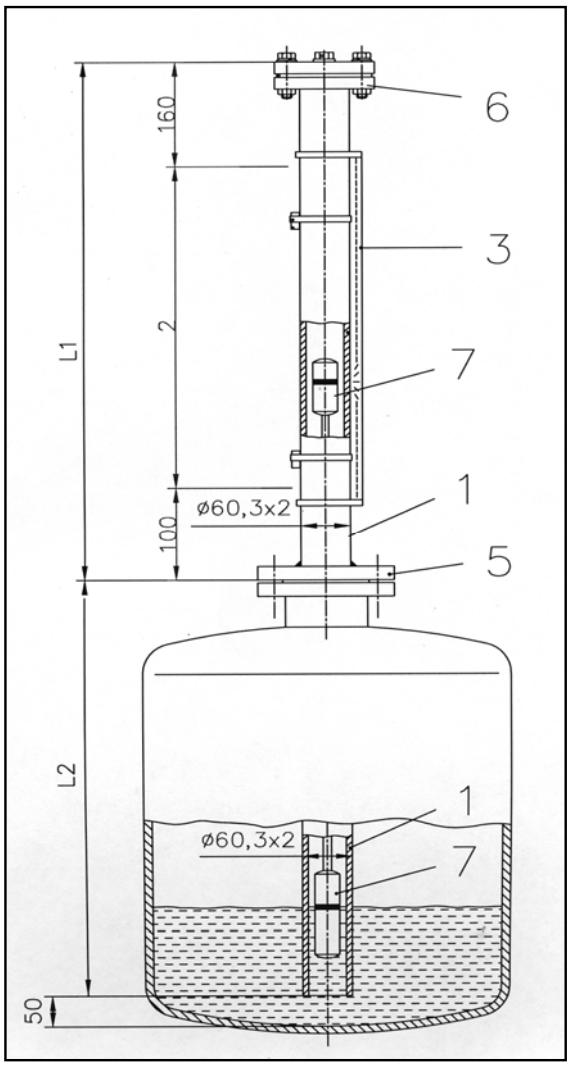

Key:

1 Float pipe welded, dimensions 60,3 x 2 mm
2 Measuring length
3 Design (indication rail)
5 Process connection on tank
6 Follower magnet giude tube top side finish
7 Float with rod and follower magnet

Technical specifications magnetic level gauge type ITA-4.0

Principle:	Communicating tubes with magnetic float
Mounting position:	Top of tank
Measuring range:	**max. 2750 mm** (depending on fluid's density)
Pipe diameter:	**60,3 x 2 mm welded,** **necking connections**
Process connection:	to specify: **Flanges DN50 PN 16 pr 2" 150#**
Drain/Vent connections:	**Plug R1/2"**
Pipe material:	**1.4404**; 1.4435; 1.4539; Hastelloy C4 (2.4610); Inconel 625 (2.4856); Inconel 825 (2.4858); Titan (3.7035) (other materials on request)
Flange material:	**CS**
Float material:	**1.4404** Titan, Titan/E-CTFE-coated
Operation temperature:	-50..+400 °C
Operation pressure:	max. 16 bar
Operation density:	min. 0,68 kg/dm³
Viscosity:	max. 5000 mPa s
Bolts & Nuts:	**CS** SS
Gasket	**PTFE up to 100 °C** **Klingersil C4400 up to 175 °C** **Graphit spiral wound up to 400 °C**
Indication rail:	**Makrolon up to 120 °C** Aluminium up to 400 °C 1.4301 up to 400 °C
Float types:	Cylindical, sealed type, with rod

Base equipment printed in bold letters!

3.6.3 Order Codes ITA-4 & ITA-4.0

Mag. Level Gauge
ITA-4 & ITA-4.0 PN16 / 150 lbs
mounted on top of tank

Order code for mag. level gauge type ITA-4 & ITA-4.0 PN 16 / 150 lbs

Code	Description
ITA-4	**1. Float pipe welded Dimensions 60,3 x 2 mm**
	2. Measuring length
L	Measuring lenght in mm (max. 2750 mm, depending on the density of the fluid)
	3. Design
0	without indication rail, each 100 mm
1	Indication rail material: Makrolon, max. 120 °C fluid temperature, each 100 mm
2	Indication rail material: Aluminium, max. 400 °C fluid temperature, each 100 mm
3	Indication rail material: 1.4401, max. 400 °C fluid temperature, each 100 mm
	4. Two-parts-construction
0	without
1	Connection of the follower magnet guide tube DN50 PN16
2	Connection of the follower magnet guide tube 2" ANSI 150 lbs RF
	5. Process connection on tank
1	Flange DN 50/PN 16
2	Flange DN 80/PN 16
3	Flange DN 100/PN 16
4	Flange DN 125/PN 16
5	Flange DN 150/PN 16
6	Flange DN 200/PN 16
A	Flange 2" ANSI/150 lbs
B	Flange 3" ANSI/150 lbs
C	Flange 4" ANSI/150 lbs
D	Flange 5" ANSI/150 lbs
E	Flange 6" ANSI/150 lbs
F	Flange 8" ANSI/150 lbs
	5.1 Surface of the process connection on tank
A	Standard- Surface Form C
B	Standard-Surface RF
C	Surface Form D Rz=40
D	Surface Form E Rz=16
E	Surface RFSF (smouth finished)
F	Surface groove (DIN 2512)
G	Surface groove large
H	Surface Feder (DIN 2512)
K	Surface tongue-large

Mag. Level Gauge
ITA-4 & ITA-4.0 PN16 / 150 lbs
mounted on top of tank

Order code for mag. level gauge type ITA-4 & ITA-4.0 PN 16 / 150 lbs

Code	Description
	6. Follower magnet guide tube topside finish
1	Flange with blind flange DN32 PN 16
2	Flange with blind flange DN50 PN 16
A	Flange with blind flange 1 1/4" ANSI 150 lbs
B	Flange with blind flange 2" ANSI 150 lbs

Floats

Code	Pressure [bar]	Material	Diameter [mm]	Length [mm]	min. Density* [kg/dm³]	vented [Y/N]	max. rod length [mm]	Notes
4V0240R1A	16	316L	52,0	265	0,9500	N	500	
4V0240R1B	16	316L	52,0	265	1,0000	N	750	
4T0240R1A	16	Titanium	50,8	265	0,6890	N	500	do not use with hydrogen or alcohol compounds
4T0240R1B	16	Titanium	50,8	265	0,7250	N	750	do not use with hydrogen or alcohol compounds
4T0240R1C	16	Titanium	50,8	265	0,7610	N	1000	do not use with hydrogen or alcohol compounds
4T0240R1D	16	Titanium	50,8	265	0,7970	N	1250	do not use with hydrogen or alcohol compounds
4T0240R1E	16	Titanium	50,8	265	0,8330	N	1500	do not use with hydrogen or alcohol compounds
4T0240R1F	16	Titanium	50,8	265	0,8690	N	1750	do not use with hydrogen or alcohol compounds
4T0240R1H	16	Titanium	50,8	265	0,9050	N	2000	do not use with hydrogen or alcohol compounds
4T0240K2A	16	Titanium	50,8	265	0,6480	N	500	only with 316SS or Aluminium indication rail; do not use with hydrogen or alcohol compounds
4T0240K2B	16	Titanium	50,8	265	0,6840	N	750	only with 316SS or Aluminium indication rail; do not use with hydrogen or alcohol compounds
4T0240K2C	16	Titanium	50,8	265	0,7200	N	1000	only with 316SS or Aluminium indication rail; do not use with hydrogen or alcohol compounds
4T0240K2D	16	Titanium	50,8	265	0,7560	N	1250	only with 316SS or Aluminium indication rail; do not use with hydrogen or alcohol compounds
4T0240K2E	16	Titanium	50,8	265	0,7920	N	1500	only with 316SS or Aluminium indication rail; do not use with hydrogen or alcohol compounds
4T0240K2F	16	Titanium	50,8	265	0,8280	N	1750	only with 316SS or Aluminium indication rail; do not use with hydrogen or alcohol compounds
4T0240K2H	16	Titanium	50,8	265	0,8640	N	2000	only with 316SS or Aluminium indication rail; do not use with hydrogen or alcohol compounds
4T0240K3A	16	Titanium	50,8	265	0,5820	N	500	only with 316SS or Aluminium indication rail; do not use with hydrogen or alcohol compounds
4T0240K3B	16	Titanium	50,8	265	0,6810	N	750	only with 316SS or Aluminium indication rail; do not use with hydrogen or alcohol compounds
4T0240K3C	16	Titanium	50,8	265	0,6540	N	1000	only with 316SS or Aluminium indication rail; do not use with hydrogen or alcohol compounds
4T0240K3D	16	Titanium	50,8	265	0,6900	N	1250	only with 316SS or Aluminium indication rail; do not use with hydrogen or alcohol compounds
4T0240K3E	16	Titanium	50,8	265	0,7260	N	1500	only with 316SS or Aluminium indication rail; do not use with hydrogen or alcohol compounds
4T0240K3F	16	Titanium	50,8	265	0,7620	N	1750	only with 316SS or Aluminium indication rail; do not use with hydrogen or alcohol compounds
4T0240K3H	16	Titanium	50,8	265	0,7980	N	2000	only with 316SS or Aluminium indication rail; do not use with hydrogen or alcohol compounds
4T0300R1A	16	Titanium	50,8	325	0,601	N	500	do not use with hydrogen or alcohol compounds
4T0300R1B	16	Titanium	50,8	325	0,629	N	750	do not use with hydrogen or alcohol compounds
4T0300R1C	16	Titanium	50,8	325	0,658	N	1000	do not use with hydrogen or alcohol compounds
4T0300R1D	16	Titanium	50,8	325	0,687	N	1250	do not use with hydrogen or alcohol compounds
4T0300R1E	16	Titanium	50,8	325	0,716	N	1500	do not use with hydrogen or alcohol compounds
4T0300R1F	16	Titanium	50,8	325	0,745	N	1750	do not use with hydrogen or alcohol compounds
4T0300R1H	16	Titanium	50,8	325	0,773	N	2000	do not use with hydrogen or alcohol compounds

Mag. Level Gauge
ITA-4 & ITA-4.0 PN16 / 150 lbs
Mounted on top of tank

Order codes for mag. Level Gauges type: ITA-4 & ITA-4.0 PN16/150 lbs

	Description							
Floats								
Code	**Pressure [bar]**	**Material**	**Diameter [mm]**	**Length [mm]**	**min. Density* [kg/dm³]**	**vented [Y/N]**	**max. rod length [mm]**	**Notes**
4T0300K2A	16	Titanium	50,8	325	0,568	N	500	do not use with hydrogen or alcohol compounds
4T0300K2B	16	Titanium	50,8	325	0,597	N	750	do not use with hydrogen or alcohol compounds
4T0300K2C	16	Titanium	50,8	325	0,625	N	1000	do not use with hydrogen or alcohol compounds
4T0300K2D	16	Titanium	50,8	325	0,654	N	1250	do not use with hydrogen or alcohol compounds
4T0300K2E	16	Titanium	50,8	325	0,683	N	1500	do not use with hydrogen or alcohol compounds
4T0300K2F	16	Titanium	50,8	325	0,712	N	1750	do not use with hydrogen or alcohol compounds
4T0300K2H	16	Titanium	50,8	325	0,741	N	2000	do not use with hydrogen or alcohol compounds
4T0300K3A	16	Titanium	50,8	325	0,5594	N	500	only with 316SS or Aluminium indication rail; do not use with hydrogen or alcohol compounds
4T0300K3B	16	Titanium	50,8	325	0,5594	N	750	only with 316SS or Aluminium indication rail; do not use with hydrogen or alcohol compounds
4T0300K3C	16	Titanium	50,8	325	0,5594	N	1000	only with 316SS or Aluminium indication rail; do not use with hydrogen or alcohol compounds
4T0300K3D	16	Titanium	50,8	325	0,5594	N	1250	only with 316SS or Aluminium indication rail; do not use with hydrogen or alcohol compounds
4T0300K3E	16	Titanium	50,8	325	0,5594	N	1500	only with 316SS or Aluminium indication rail; do not use with hydrogen or alcohol compounds
4T0300K3F	16	Titanium	50,8	325	0,5594	N	1750	only with 316SS or Aluminium indication rail; do not use with hydrogen or alcohol compounds
4T0300K3H	16	Titanium	50,8	325	0,5594	N	2000	only with 316SS or Aluminium indication rail; do not use with hydrogen or alcohol compounds

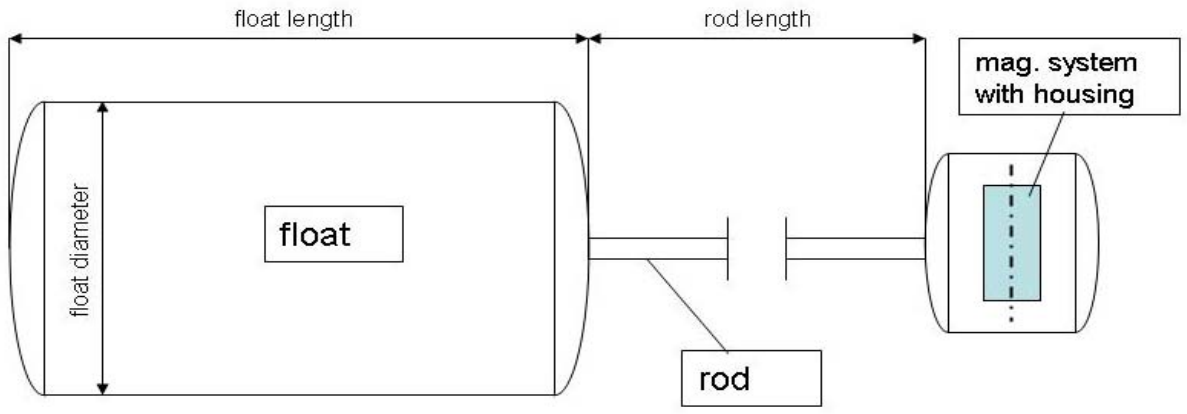

For additional accessories please refer to the chapters "Special Equipment" and "Electrical Accessories and Switches"

*The min. densities only are valid for temperature = 50 °C and rod dimensions 1000 mm (length) and 6 mm (diameter, standard).

3.6.3 Order Codes ITA-4 & ITA-4.0

	1. Type of Level Gauge	2. Mesuring length in mm [or inches]	3. Design [Indication rail]	4. Two-parts construction	5. Process connection to tank	5.1 Surface of process connection flange	6. Follower magnet guide tube topside finish	7. Float
ITA-4								
ITA-4.0								

3.7.1 ITA-4.1

Characteristics: PN16 / Float pipe and flange material: 1.4404
(mounted from top of tank)

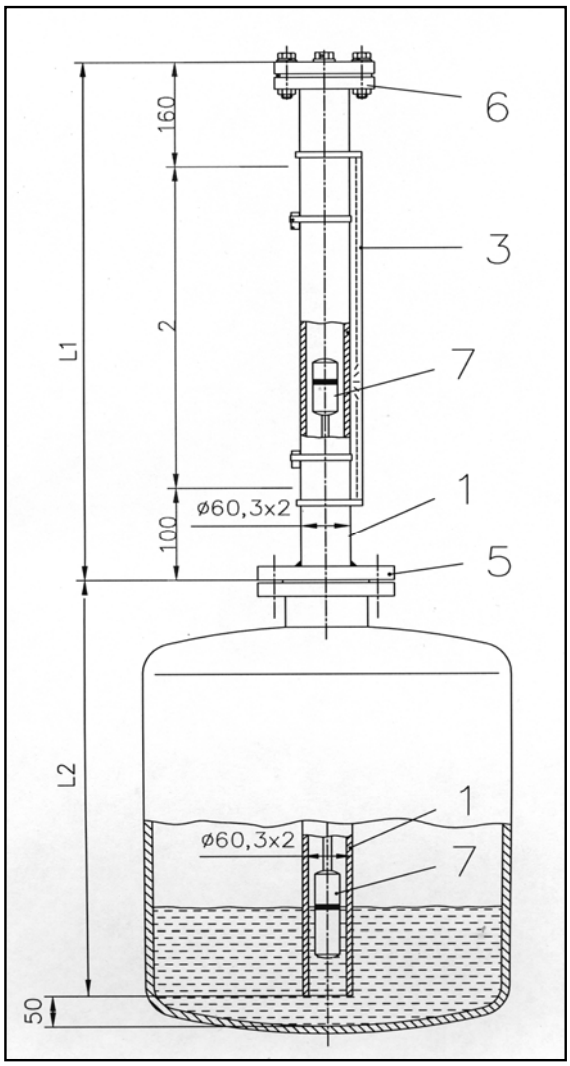

Key:

1 Float pipe welded, dimensions 88,9 x 2 mm
2 Measuring length
3 Design (indication rail)
5 Process connection on tank
6 Follower magnet giude tube top side finish
7 Float with rod and follower magnet

Technical specifications magnetic level gauge type ITA-4

Principle:	Communicating tubes with magnetic float
Mounting position:	Top of tank
Measuring range:	**max. 2750 mm** (depending on fluid's density)
Pipe diameter:	**88,9 x 2 mm welded,** **necking connections**
Process connection:	to specify: **Flanges DN50 PN 16 pr 2" 150#**
Drain/Vent connections:	**Plug R1/2"**
Pipe material:	**1.4404**; 1.4435; 1.4539; Hastelloy C4 (2.4610); Inconel 625 (2.4856); Inconel 825 (2.4858); Titan (3.7035) (other materials on request)
Flange material:	same as pipe material
Float material:	**1.4404** Titan, Titan/E-CTFE-coated
Operation temperature:	-50..+400 °C
Operation pressure:	max. 16 bar
Operation density:	min. 0,35 kg/dm³
Viscosity:	max. 5000 mPa s
Bolts & Nuts:	**CS** SS
Gasket	**PTFE up to 100 °C** **Klingersil C4400 up to 175 °C** **Graphit spiral wound up to 400 °C**
Indication rail:	**Makrolon up to 120 °C** Aluminium up to 400 °C 1.4301 up to 400 °C
Float types:	Cylindical, sealed type, with rod

Base equipment printed in bold letters!

3.7.2 ITA-4.1.0

Characteristics: PN16 / Float pipe: 1.4404 and flanges : CS
(mounted from top of tank)

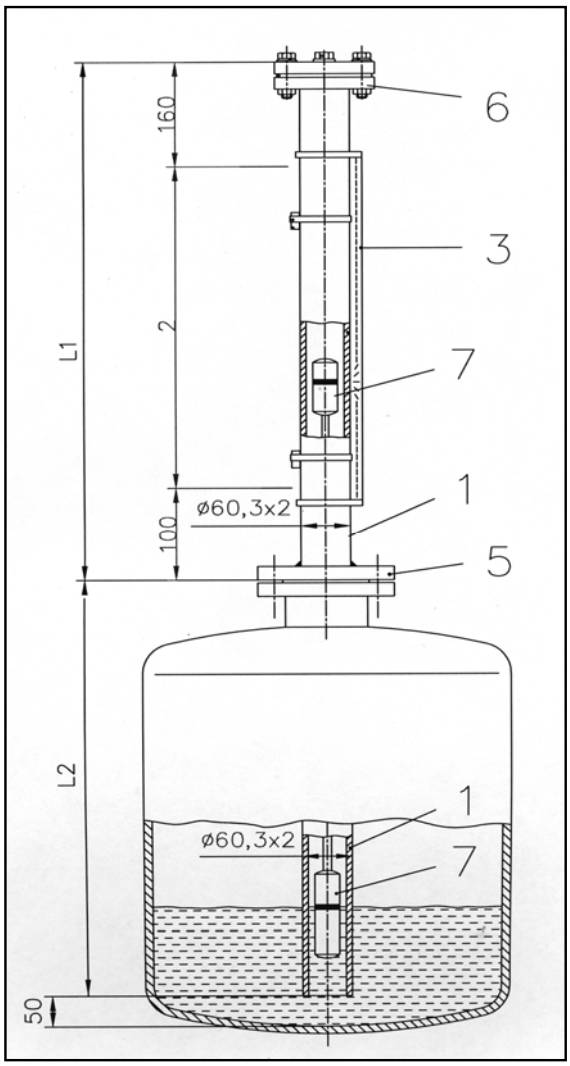

Key:

1 Float pipe welded, dimensions 88,9 x 2 mm
2 Measuring length
3 Design (indication rail)
5 Process connection on tank
6 Follower magnet giude tube top side finish
7 Float with rod and follower magnet

Technical specifications magnetic level gauge type ITA-4.0

Principle:	Communicating tubes with magnetic float
Mounting position:	Top of tank
Measuring range:	**max. 2750 mm** (depending on fluid's density)
Pipe diameter:	**88,9 x 2 mm welded,** **necking connections**
Process connection:	to specify: **Flanges DN50 PN 16 pr 2" 150#**
Drain/Vent connections:	**Plug R1/2"**
Pipe material:	**1.4404**; 1.4435; 1.4539; Hastelloy C4 (2.4610); Inconel 625 (2.4856); Inconel 825 (2.4858); Titan (3.7035) (other materials on request)
Flange material:	**CS**
Float material:	**1.4404** Titan, Titan/E-CTFE-coated
Operation temperature:	-50..+400 °C
Operation pressure:	max. 16 bar
Operation density:	min. 0,35 kg/dm³
Viscosity:	max. 5000 mPa s
Bolts & Nuts:	**CS** SS
Gasket	**PTFE up to 100 °C** **Klingersil C4400 up to 175 °C** **Graphit spiral wound up to 400 °C**
Indication rail:	**Makrolon up to 120 °C** Aluminium up to 400 °C 1.4301 up to 400 °C
Float types:	Cylindical, sealed type, with rod

Base equipment printed in bold letters!

3.7.3 Order codes ITA-4.1 & ITA-4.1.0

Mag. Level Gauge
ITA-4.1 & ITA-4.1.0 PN16 / 150 lbs
mounted on top of tank

Order codes for mag. level gauge type ITA-4.1 & ITA-4.1.0 PN 16 / 150 lbs

Code	Description
ITA-4.1	**1. Float pipe welded 88,9 x 2 mm**
	2. Measuring length
L	Measuring lenght in mm (max. 2750 mm, depending on the density of the fluid)
	3. Design
0	without indication rail, each 100 mm
1	Indication rail material: Makrolon, max. 120 °C fluid temperature, each 100 mm
2	Indication rail material: Aluminium, max. 400 °C fluid temperature, each 100 mm
3	Indication rail material: 1.4401, max. 400 °C fluid temperature, each 100 mm
	4. Two-parts-construction
0	without
1	Connection of the follower magnet guide tube DN50 PN16
2	Connection of the follower magnet guide tube 2" ANSI 150 lbs RF
	5. Process connection on tank
1	Flange DN 80/PN 16
2	Flange DN 100/PN 16
3	Flange DN 125/PN 16
4	Flange DN 150/PN 16
5	Flange DN 200/PN 16
A	Flange 3" ANSI/150 lbs
B	Flange 4" ANSI/150 lbs
C	Flange 5" ANSI/150 lbs
D	Flange 6" ANSI/150 lbs
E	Flange 8" ANSI/150 lbs
	5.1 Surface of the process connection on tank
A	Standard- Surface Form C
B	Standard-Surface RF
C	Surface Form D Rz=40
D	Surface Form E Rz=16
E	Surface RFSF (smouth finished)
F	Surface groove (DIN 2512)
G	Surface groove large
H	Surface Feder (DIN 2512)
K	Surface tongue-large

Mag. Level Gauge
ITA-4.1 & ITA-4.1.0 PN16 / 150 lbs
mounted on top of tank

Order codes for mag. level gauge type ITA-4.1 & ITA-4.1.0 PN 16 / 150 lbs

Code	Description							
	6. Follower magnet guide tube topside finish							
1	Flange with blind flange DN32 PN 16							
A	Flange with blind flange 1 1/2" ANSI 150 lbs							
7. Floats								
Code	**Pressure [bar]**	**Material**	**Diameter [mm]**	**Length [mm]**	**min. Density* [kg/dm³]**	**vented [Y/N]**	**max. rod length [mm]**	**Notes**
4T0152R1A	ATM	Titanium	80	175	0,4070	N	500	do not use with hydrogen or alcohol compounds
4T0152R1B	ATM	Titanium	80	175	0,4310	N	750	do not use with hydrogen or alcohol compounds
4T0152R1C	ATM	Titanium	80	175	0,4540	N	1000	do not use with hydrogen or alcohol compounds
4T0152R1D	ATM	Titanium	80	175	0,4770	N	1250	do not use with hydrogen or alcohol compounds
4T0152R1E	ATM	Titanium	80	175	0,5000	N	1500	do not use with hydrogen or alcohol compounds
4T0152R1F	ATM	Titanium	80	175	0,5240	N	1750	do not use with hydrogen or alcohol compounds
4T0152R1H	ATM	Titanium	80	175	0,5470	N	2000	do not use with hydrogen or alcohol compounds
4T0152K2A	ATM	Titanium	80	175	0,4700	N	500	do not use with hydrogen or alcohol compounds
4T0152K2B	ATM	Titanium	80	175	0,4310	N	750	do not use with hydrogen or alcohol compounds
4T0152K2C	ATM	Titanium	80	175	0,4540	N	1000	do not use with hydrogen or alcohol compounds
4T0152K2D	ATM	Titanium	80	175	0,4770	N	1250	do not use with hydrogen or alcohol compounds
4T0152K2E	ATM	Titanium	80	175	0,5000	N	1500	do not use with hydrogen or alcohol compounds
4T0152K2F	ATM	Titanium	80	175	0,5240	N	1750	do not use with hydrogen or alcohol compounds
4T0152K2H	ATM	Titanium	80	175	0,5470	N	2000	do not use with hydrogen or alcohol compounds
4T0152K3A	ATM	Titanium	80	175	0,4710	N	500	only with 316SS or Aluminium indication rail; do not use with hydrogen or alcohol compounds
4T0152K3B	ATM	Titanium	80	175	0,4940	N	750	only with 316SS or Aluminium indication rail; do not use with hydrogen or alcohol compounds
4T0152K3C	ATM	Titanium	80	175	0,5180	N	1000	only with 316SS or Aluminium indication rail; do not use with hydrogen or alcohol compounds
4T0152K3D	ATM	Titanium	80	175	0,5410	N	1250	only with 316SS or Aluminium indication rail; do not use with hydrogen or alcohol compounds
4T0152K3E	ATM	Titanium	80	175	0,5640	N	1500	only with 316SS or Aluminium indication rail; do not use with hydrogen or alcohol compounds
4T0152K3F	ATM	Titanium	80	175	0,5870	N	1750	only with 316SS or Aluminium indication rail; do not use with hydrogen or alcohol compounds
4T0152K3H	ATM	Titanium	80	175	0,6100	N	2000	only with 316SS or Aluminium indication rail; do not use with hydrogen or alcohol compounds
4T0182R1A	ATM	Titanium	80	205	0,3620	N	500	do not use with hydrogen or alcohol compounds
4T0182R1B	ATM	Titanium	80	205	0,3810	N	750	do not use with hydrogen or alcohol compounds
4T0182R1C	ATM	Titanium	80	205	0,4000	N	1000	do not use with hydrogen or alcohol compounds
4T0182R1D	ATM	Titanium	80	205	0,4200	N	1250	do not use with hydrogen or alcohol compounds
4T0182R1E	ATM	Titanium	80	205	0,4390	N	1500	do not use with hydrogen or alcohol compounds
4T0182R1F	ATM	Titanium	80	205	0,4580	N	1750	do not use with hydrogen or alcohol compounds
4T0182R1H	ATM	Titanium	80	205	0,4780	N	2000	do not use with hydrogen or alcohol compounds
4T0182K2A	ATM	Titanium	80	205	0,3370	N	500	do not use with hydrogen or alcohol compounds
4T0182K2B	ATM	Titanium	80	205	0,3570	N	750	do not use with hydrogen or alcohol compounds
4T0182K2C	ATM	Titanium	80	205	0,3760	N	1000	do not use with hydrogen or alcohol compounds
4T0182K2D	ATM	Titanium	80	205	0,3950	N	1250	do not use with hydrogen or alcohol compounds
4T0182K2E	ATM	Titanium	80	205	0,4150	N	1500	do not use with hydrogen or alcohol compounds
4T0182K2F	ATM	Titanium	80	205	0,3430	N	1750	do not use with hydrogen or alcohol compounds
4T0182K2H	ATM	Titanium	80	205	0,4530	N	2000	do not use with hydrogen or alcohol compounds

Mag. Level Gauge
ITA-4.1 & ITA-4.1.0 PN16 / 150 lbs
Mounted on top of tank

Order codes for mag. Level Gauges type: ITA-4.1 & ITA-4.1.0 PN16/150 lbs

	Description							
Floats								
Code	**Pressure [bar]**	**Material**	**Diameter [mm]**	**Length [mm]**	**min. Density* [kg/dm³]**	**vented [Y/N]**	**max. rod length [mm]**	**Notes**
4T0182K3A	ATM	Titanium	80	205	0,3000	N	500	only with 316SS or Aluminium indication rail; do not use with hydrogen or alcohol compounds
4T0182K3B	ATM	Titanium	80	205	0,3190	N	750	only with 316SS or Aluminium indication rail; do not use with hydrogen or alcohol compounds
4T0182K3C	ATM	Titanium	80	205	0,3380	N	1000	only with 316SS or Aluminium indication rail; do not use with hydrogen or alcohol compounds
4T0182K3D	ATM	Titanium	80	205	0,3580	N	1250	only with 316SS or Aluminium indication rail; do not use with hydrogen or alcohol compounds
4T0182K3E	ATM	Titanium	80	205	0,3770	N	1500	only with 316SS or Aluminium indication rail; do not use with hydrogen or alcohol compounds
4T0182K3F	ATM	Titanium	80	205	0,3960	N	1750	only with 316SS or Aluminium indication rail; do not use with hydrogen or alcohol compounds
4T0182K3H	ATM	Titanium	80	205	0,4160	N	2000	only with 316SS or Aluminium indication rail; do not use with hydrogen or alcohol compounds
4T0242R1A	ATM	Titanium	80	265	0,2980	N	500	do not use with hydrogen or alcohol compounds
4T0242R1B	ATM	Titanium	80	265	0,3120	N	750	do not use with hydrogen or alcohol compounds
4T0242R1C	ATM	Titanium	80	265	0,3270	N	1000	do not use with hydrogen or alcohol compounds
4T0242R1D	ATM	Titanium	80	265	0,3410	N	1250	do not use with hydrogen or alcohol compounds
4T0242R1E	ATM	Titanium	80	265	0,3560	N	1500	do not use with hydrogen or alcohol compounds
4T0242R1F	ATM	Titanium	80	265	0,3700	N	1750	do not use with hydrogen or alcohol compounds
4T0242R1H	ATM	Titanium	80	265	0,3850	N	2000	do not use with hydrogen or alcohol compounds
4T0242K2A	ATM	Titanium	80	265	0,2800	N	500	do not use with hydrogen or alcohol compounds
4T0242K2B	ATM	Titanium	80	265	0,2940	N	750	do not use with hydrogen or alcohol compounds
4T0242K2C	ATM	Titanium	80	265	0,3090	N	1000	do not use with hydrogen or alcohol compounds
4T0242K2D	ATM	Titanium	80	265	0,3230	N	1250	do not use with hydrogen or alcohol compounds
4T0242K2E	ATM	Titanium	80	265	0,3380	N	1500	do not use with hydrogen or alcohol compounds
4T0242K2F	ATM	Titanium	80	265	0,3520	N	1750	do not use with hydrogen or alcohol compounds
4T0242K2H	ATM	Titanium	80	265	0,3670	N	2000	do not use with hydrogen or alcohol compounds
4T0242K3A	ATM	Titanium	80	265	0,2530	N	500	only with 316SS or Aluminium indication rail; do not use with hydrogen or alcohol compounds
4T0242K3B	ATM	Titanium	80	265	0,2680	N	750	only with 316SS or Aluminium indication rail; do not use with hydrogen or alcohol compounds
4T0242K3C	ATM	Titanium	80	265	0,2820	N	1000	only with 316SS or Aluminium indication rail; do not use with hydrogen or alcohol compounds
4T0242K3D	ATM	Titanium	80	265	0,2970	N	1250	only with 316SS or Aluminium indication rail; do not use with hydrogen or alcohol compounds
4T0242K3E	ATM	Titanium	80	265	0,3110	N	1500	only with 316SS or Aluminium indication rail; do not use with hydrogen or alcohol compounds
4T0242K3F	ATM	Titanium	80	265	0,3260	N	1750	only with 316SS or Aluminium indication rail; do not use with hydrogen or alcohol compounds
4T0242K3H	ATM	Titanium	80	265	0,3400	N	2000	only with 316SS or Aluminium indication rail; do not use with hydrogen or alcohol compounds

Mag. Level Gauge
ITA-4.1 & ITA-4.1.0 PN16 / 150 lbs
Mounted on top of tank

Order codes for mag. Level Gauges type: ITA-4.1 & ITA-4.1.0 PN16/150 lbs

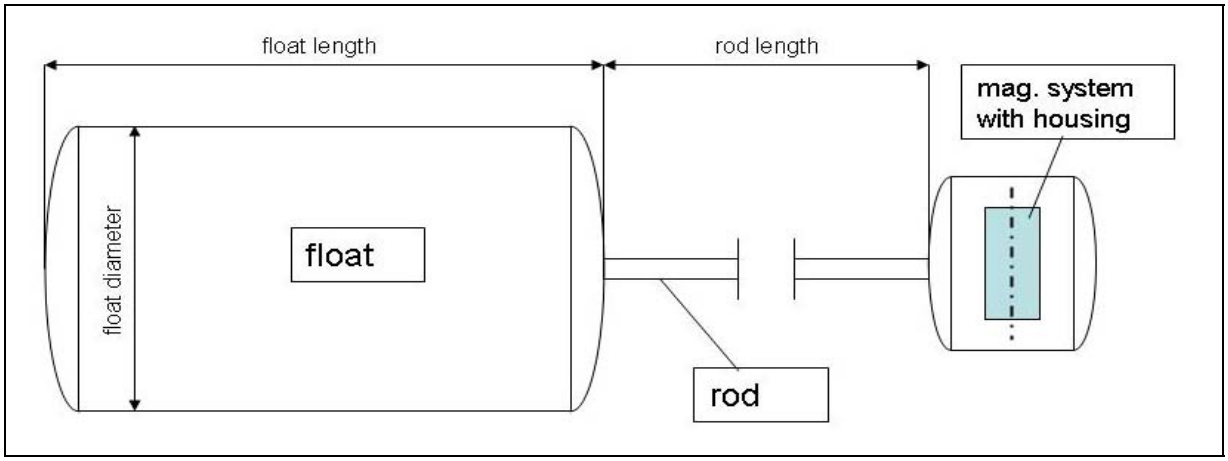

For additional accessories please refer to the chapters "Special Equipment" and "Electrical Accessories and Switches"

*The min. densities only are valid for temperature = 50 °C and rod dimensions 1000 mm (length) and 6 mm (diameter, standard).

3.7.3 Order Scheme ITA-4.1 & ITA-4.1.0

	1. Type of level gauge [ITA-4.1 or ITA-4.1.0	2. Measuring length in mm [inches]	3. Design [Indication rail]	4. Two-parts-construction	5. Process connection on tank	5.1 Surface of process connection on tank	6. Follower magnet guide tube topside finish	7. Float
ITA-4.1								
ITA-4.1.0								

3.8.1 ITA-5

Characteristics: PN16 / Float pipe and flange material: 1.4404
(Process connections top/bottom)

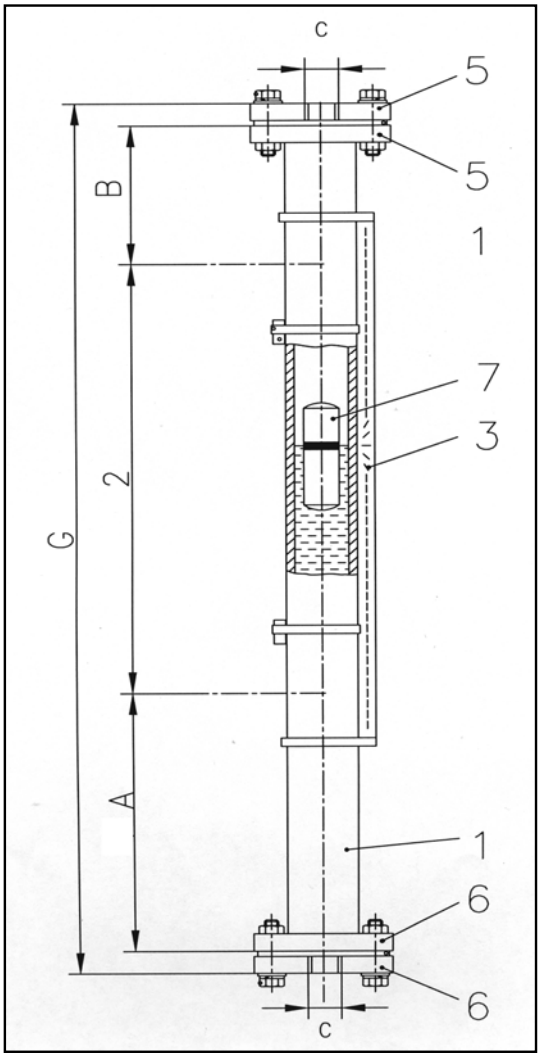

Key:

1 Float pipe welded, dimensions 60,3 x 2 mm
2 Distance between process connections
3 Design (indication rail)
5 Process connection top side
6 Process connection bottom side
7 Float removal flange

Technical specifications magnetic level gauge type ITA-5

Principle:	Communicating tubes with magnetic float
Mounting position:	vertical
Measuring range:	**max. 5000 mm (one-part)** > 5000 mm 2- or multipart
Pipe diameter:	**60,3 x 2 mm welded,** 2" Sch10 60,3 x 2…8,7 mm seamless (depending on pressure rating)
Process connection:	to specify: **R1/2" threaded (up to PN40)** **Welding or threaded stud** Flanges DN15…50 (1/2"…2" 150#),
Pipe material:	**1.4404**; 1.4435; 1.4539; Hastelloy C4 (2.4610); Inconel 625 (2.4856); Inconel 825 (2.4858); Titan (3.7035) (other materials on request)
Flange material:	same as pipe material
Float material:	**1.4404** Titan, Titan/E-CTFE-coated
Operation temperature:	-50..+400 °C
Operation pressure:	**max. 16 bar**, up to 320 bar
Operation density:	min. 0,3371 kg/dm³
Viscosity:	max. 5000 mPa s
Bolts & Nuts:	**CS** SS
Gasket	**PTFE up to 100 °C** **Klingersil C4400 up to 175 °C** **Graphit spiral wound up to 400 °C******
Indication rail:	Makrolon up to 120 °C Aluminium up to 400 °C 1.4301 up to 400 °C
Float types:	Cylindical, sealed type or vented type (Depending on pressure rating)
Standard dimensions:	-A = 240 mm* -B = 130 mm (up to PN64 **- C = R1/2" (up to PN40)** **1/2"NPT (all pressure ratings)**

Base equipment printed in bold letters!
***depending on the density scale A can be enlarged**

3.8.2 ITA-5.0

Characteristics: PN16 / Float pipe: 1.4404 and flanges : CS
(Process connections top/bottom)

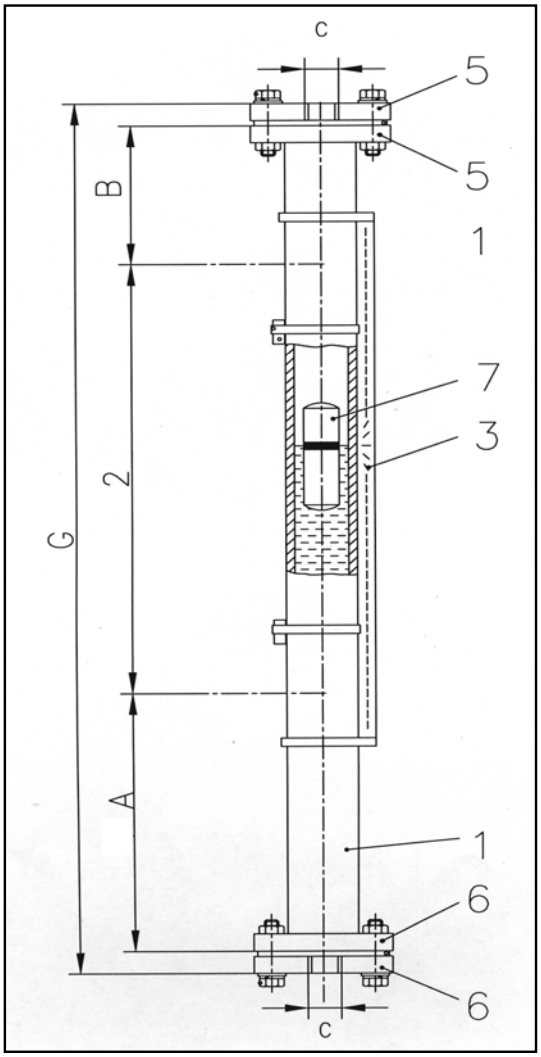

Key:

1 Float pipe welded, dimensions 60,3 x 2 mm
2 Distance between process connections
3 Design (indication rail)
5 Process connection top side
6 Process connection bottom side
7 Float removal flange

Technical specifications magnetic level gauge type ITA-5.0

Principle:	Communicating tubes with magnetic float
Mounting position:	vertical
Measuring range:	**max. 5000 mm (one-part)** > 5000 mm 2- or multipart
Pipe diameter:	**60,3 x 2 mm welded,** 2" Sch10 60,3 x 2…8,7 mm seamless (depending on pressure rating)
Process connection:	to specify: **R1/2" threaded (up to PN40)** **Welding or threaded stud** Flanges DN15…50 (1/2"…2" 150#),
Pipe material:	**1.4404**; 1.4435; 1.4539; Hastelloy C4 (2.4610); Inconel 625 (2.4856); Inconel 825 (2.4858); Titan (3.7035) (other materials on request)
Flange material:	**CS**
Float material:	**1.4404** Titan, Titan/E-CTFE-coated
Operation temperature:	-50..+400 °C
Operation pressure:	**max. 16 bar**, up to 320 bar
Operation density:	min. 0,3371 kg/dm³
Viscosity:	max. 5000 mPa s
Bolts & Nuts:	**CS** SS
Gasket	**PTFE up to 100 °C** **Klingersil C4400 up to 175 °C** **Graphit spiral wound up to 400 °C****
Indication rail:	Makrolon up to 120 °C Aluminium up to 400 °C 1.4301 up to 400 °C
Float types:	Cylindical, sealed type or vented type (Depending on pressure rating)
Standard dimensions:	-A = 240 mm* -B = 130 mm (up to PN64 **- C = R1/2" (up to PN40)** **1/2"NPT (all pressure ratings)**

Base equipment printed in bold letters!
***depending on the density scale A can be enlarged**

3.8.3 Order codes ITA-5 & ITA-5.0

Mag. Level Gauge
ITA-5 & ITA-5.0 PN16/40 / 150 lbs/300 lbs*

without side studs, process connections topside/downside

Prices for mag. level gauge type ITA-5 & ITA- 5.0 PN 16/40 / 150 lbs/300 lbs*

Code	Description
ITA-5 ITA-5.0	**1. Float pipe welded** **Dimensions 60,3x2 mm**
	2. Distance between process connections
L	Distance between process connections in mm
	3. Design
0	without indication rail each 100 mm
1	Indication rail material Makrolon, max. 120 °C, each 100 mm
2	Indication rail material Aluminium, max. 400 °C, each 100 mm
3	Indication rail material 1.4401, max. 400 °C, each 100 mm
	4. Distance between process connections > 5000 mm
A	Dist. betw. process connections < 5000 mm, without connection flanges
B	Dist. betw. process connections > 5000 mm, with connection flanges DN 32 PN 16
	5. Process connection topside
Y	Welding connection (please specify)
Z	Female thread (please specify)
1	Flange with blind flange DN 32 PN 16
	5.1 Surface of process connection topside
0	without
A	Standard-Surface Form C
B	Standard-Surface RF
C	Surface Form D Rz=40
D	Surface Form E Rz=16
E	Surface RFSF (smooth finished)
F	Surface groove (DIN2512)
G	Surface groove large
H	Surface tongue (DIN2512)
K	Surface tongue-large
	5.2 Bolts & Nuts process connection topside
0	without
31	M16 x 65 mm; mat. zinced steel; flanges DN 32 PN 16; DIN 931
42	M16 x 65 mm; mat. A2-70; flanges DN 32 PN 16; DIN 931
63	M16 x 65 mm; mat. zinced steel; flanges DN 50 PN 16, DIN 931
64	M16 x 65 mm; mat. A2-70; flanges DN 50 PN 16; DIN 931
3X	M16 x 65 mm; mat. PTFE-coated; flanges DN 50 PN 16
3Z	M16 x 80 mm; mat. PTFE-coated; flanges DN 50 PN 16
41	M16 x 65 mm; mat. zinced steel; flanges DN 32 PN 40; DIN 931

Mag. Level Gauge
ITA-5 & ITA-5.0 PN16/40 / 150 lbs/300 lbs*

without side studs, process connections topside/downside

Prices for mag. level gauge type ITA-5 & ITA- 5.0 PN 16/40 / 150 lbs/300 lbs*

Code	Description
	5.2 Bolts & Nuts process connection topside (Continuation
32	M16 x 65 mm; mat. A2-70; flanges DN 32 PN 40; DIN 931
43	M16 x 80 mm; mat. zinced steel; flanges DN 32 PN 40, DIN 2510
44	M16 x 80 mm; mat. A2-70; flanges DN 32 PN 40; DIN 2510
65	M16 x 65 mm; mat. zinced steel; flanges DN 50 PN 40; DIN 931
66	M16 x 65 mm; mat. A2-70; flanges DN 50 PN 40; DIN 931
67	M16 x 80 mm; mat. zinced steel; flanges DN 50 PN 40, DIN 2510
68	M16 x 80 mm; mat. A2-70; flanges DN 50 PN 40; DIN 2510
6X	M16 x 65 mm; mat. PTFE-coated; flanges DN 50 PN 40
6Z	M16 x 80 mm; mat. PTFE-coated; flanges DN 50 PN 40
	5.2 Bolts & Nuts process connection topside (Continuation)
3A	5/8 x 83 mm; RF; mat. A193B7/A1942H zinced steel; flange 2" 150 lbs; ANSI B 16.5
3B	5/8 x 83 mm; RF; mat. A193B8/A1948M SS; flange 2" 150 lbs; ANSI B 16.5
3C	5/8 x 95 mm; RTJ; mat. A193B7/A1942H zinced steel; flange 2" 150 lbs; ANSI B 16.5
3D	5/8 x 95 mm; RTJ; mat. A193B8/A1948M SS; flange 2" 150 lbs; ANSI B 16.5
3T	5/8 x 83 mm; RF; mat. PTFE-coated; flange 2" 150 lbs; ANSI B 16.5
3V	5/8 x 95 mm; RTJ; mat. PTFE-coated; flange 2" 150 lbs; ANSI B 16.5
FA	5/8 x 89 mm; RF; mat. A193B7/A1942H zinced steel; flange 2" 300 lbs; ANSI B 16.5
FB	5/8 x 89 mm; RF; mat. A193B8/A1948M SS; flange 2" 300 lbs; ANSI B 16.5
FC	5/8 x 102 mm; RTJ; mat. A193B7/A1942H zinced steel; flange 2" 300 lbs; ANSI B 16.5
FD	5/8 x 102 mm; RTJ; mat. A193B8/A1948M SS; flange 2" 300 lbs; ANSI B 16.5
FT	5/8 x 89 mm; RF; mat. PTFE-coated; flange 2" 300 lbs; ANSI B 16.5
FV	5/8 x 102 mm; RTJ; mat. PTFE-coated; flange 2" 300 lbs; ANSI B 16.5
	6. Process connection bottom side
Y	Welding connection (please specify)
Z	Female thread (please specify)
A	Flange with blind flange DN 50 PN 16
	6.1 Surface of process connection bottom side
0	without
A	Standard-Surface Form C
B	Standard-Surface RF
C	Surface Form D Rz=40
D	Surface Form E Rz=16
E	Surface RFSF (smooth finished)
F	Surface groove (DIN2512)
G	Surface groove large
H	Surface tongue (DIN2512)
K	Surface tongue-large

Mag. Level Gauge
ITA-5 & ITA-5.0 PN16/40 / 150 lbs/300 lbs*

without side studs, process connections topside/downside

Prices for mag. level gauge type ITA-5 & ITA- 5.0 PN 16/40 / 150 lbs/300 lbs*

Code	Description
	6.2 Bolts & Nuts process connection bottom sid
0	without
31	M16 x 65 mm; mat. zinced steel; flanges DN 32 PN 16; DIN 931
42	M16 x 65 mm; mat. A2-70; flanges DN 32 PN 16; DIN 931
63	M16 x 65 mm; mat. zinced steel; flanges DN 50 PN 16, DIN 931
64	M16 x 65 mm; mat. A2-70; flanges DN 50 PN 16; DIN 931
3X	M16 x 65 mm; mat. PTFE-coated; flanges DN 50 PN 16
3Z	M16 x 80 mm; mat. PTFE-coated; flanges DN 50 PN 16
41	M16 x 65 mm; mat. zinced steel; flanges DN 32 PN 40; DIN 931
32	M16 x 65 mm; mat. A2-70; flanges DN 32 PN 40; DIN 931
43	M16 x 80 mm; mat. zinced steel; flanges DN 32 PN 40, DIN 2510
44	M16 x 80 mm; mat. A2-70; flanges DN 32 PN 40; DIN 2510
65	M16 x 65 mm; mat. zinced steel; flanges DN 50 PN 40; DIN 931
66	M16 x 65 mm; mat. A2-70; flanges DN 50 PN 40; DIN 931
67	M16 x 80 mm; mat. zinced steel; flanges DN 50 PN 40, DIN 2510
68	M16 x 80 mm; mat. A2-70; flanges DN 50 PN 40; DIN 2510
6X	M16 x 65 mm; mat. PTFE-coated; flanges DN 50 PN 40
6Z	M16 x 80 mm; mat. PTFE-coated; flanges DN 50 PN 40
3A	5/8 x 83 mm; RF; mat. A193B7/A1942H zinced steel; flange 2" 150 lbs; ANSI B 16.5
3A	5/8 x 83 mm; RF; mat. A193B7/A1942H zinced steel; flange 2" 150 lbs; ANSI B 16.5
3B	5/8 x 83 mm; RF; mat. A193B8/A1948M SS; flange 2" 150 lbs; ANSI B 16.5
3C	5/8 x 95 mm; RTJ; mat. A193B7/A1942H zinced steel; flange 2" 150 lbs; ANSI B 16.5
3D	5/8 x 95 mm; RTJ; mat. A193B8/A1948M SS; flange 2" 150 lbs; ANSI B 16.5
3T	5/8 x 83 mm; RF; mat. PTFE-coated; flange 2" 150 lbs; ANSI B 16.5
3V	5/8 x 95 mm; RTJ; mat. PTFE-coated; flange 2" 150 lbs; ANSI B 16.5
FA	5/8 x 89 mm; RF; mat. A193B7/A1942H zinced steel; flange 2" 300 lbs; ANSI B 16.5
FB	5/8 x 89 mm; RF; mat. A193B8/A1948M SS; flange 2" 300 lbs; ANSI B 16.5
FC	5/8 x 102 mm; RTJ; mat. A193B7/A1942H zinced steel; flange 2" 300 lbs; ANSI B 16.5
FD	5/8 x 102 mm; RTJ; mat. A193B8/A1948M SS; flange 2" 300 lbs; ANSI B 16.5
FT	5/8 x 89 mm; RF; mat. PTFE-coated; flange 2" 300 lbs; ANSI B 16.5
FV	5/8 x 102 mm; RTJ; mat. PTFE-coated; flange 2" 300 lbs; ANSI B 16.5

For additional accessories please go to the chapters "Special equipment" and "Electrical accessories and Switches"

***for higher pressure ratings please see ITA-10 to ITA-13**

Mag. Level Gauge
ITA-5 & ITA-5.0 PN16/150 lbs

Order codes for mag. Level Gauges type: ITA-5 & ITA-5.0 PN16/150 lbs

	Description						
Floats							
Code	**Pressure [bar]**	**Material**	**Diameter [mm]**	**Length [mm]**	**min. Density [kg/dm³]**	**vented [Y/N]**	**Notes**
3V0100K1	16	316L	52	125	1,4907	N	
3V0100K3	16	316L	52	125	1,0524	N	only with 316SS or Aluminium indication rail
3V0120K1	16	316L	52	145	1,2346	N	
3V0120K3	16	316L	52	145	0,9034	N	only with 316SS or Aluminium indication rail
3V0150K1	16	316L	52	175	0,9905	N	
3V0150K3	16	316L	52	175	0,8606	N	only with 316SS or Aluminium indication rail
3V0180K1	16	316L	52	205	0,8781	N	
3V0180K3	16	316L	52	205	0,7022	N	only with 316SS or Aluminium indication rail
3V0240K1	16	316L	52	265	0,7374	N	
3V0240K3	16	316L	52	265	0,6209	N	only with 316SS or Aluminium indication rail
3V1240K1	40	316L	52	265	1,000	N	
3T0100K1	16	Titanium	50,8	125	1,1788	N	do not use with hydrogen or alcohol compounds
3T0100K3	16	Titanium	50,8	125	0,7821	N	only with 316SS or Aluminium indication rail; do not use with hydrogen or alcohol compounc
3T0120K1	16	Titanium	50,8	145	0,9646	N	do not use with hydrogen or alcohol compounds
3T0120K3	16	Titanium	50,8	145	0,6514	N	only with 316SS or Aluminium indication rail; do not use with hydrogen or alcohol compounc
3T0150K1	16	Titanium	50,8	175	0,7763	N	do not use with hydrogen or alcohol compounds
3T0150K3	16	Titanium	50,8	175	0,5675	N	only with 316SS or Aluminium indication rail; do not use with hydrogen or alcohol compounc
3T0180K1	16	Titanium	50,8	205	0,6716	N	do not use with hydrogen or alcohol compounds
3T0180K3	16	Titanium	50,8	205	0,5094	N	only with 316SS or Aluminium indication rail; do not use with hydrogen or alcohol compounc
3T0240K1	16	Titanium	50,8	265	0,5723	N	do not use with hydrogen or alcohol compounds
3T0240K3	16	Titanium	50,8	265	0,4550	N	only with 316SS or Aluminium indication rail; do not use with hydrogen or alcohol compounc
3T0300K1	16	Titanium	50,8	325	0,4955	N	do not use with hydrogen or alcohol compounds
3T0300K3	16	Titanium	50,8	325	0,4063	N	only with 316SS or Aluminium indication rail; do not use with hydrogen or alcohol compounc
3T0400K1	16	Titanium	50,8	425	0,4358	N	do not use with hydrogen or alcohol compounds
3T0400K3	16	Titanium	50,8	425	0,3719	N	only with 316SS or Aluminium indication rail; do not use with hydrogen or alcohol compounc
3T0500K1	16	Titanium	50,8	525	0,4017	N	do not use with hydrogen or alcohol compounds
3T0500K3	16	Titanium	50,8	525	0,3539	N	only with 316SS or Aluminium indication rail; do not use with hydrogen or alcohol compounc
3T0600K1	16	Titanium	50,8	625	0,3761	N	do not use with hydrogen or alcohol compounds
3T0600K3	16	Titanium	50,8	625	0,3371	N	only with 316SS or Aluminium indication rail; do not use with hydrogen or alcohol compounc
3H0150K1	16	Titanium, Halar-coatec	52	175	0,902	N	
3HC012K1	16	Hastelloy C4	52	175	1,2455	N	
3HC024K1	16	Hastelloy C4	52	265	0,7510	N	
3HC024K3	16	Hastelloy C4	52	265	0,6296	N	only with 316SS or Aluminium indication rail

NOTE: The prices for the single parts in the above price list are only meant for the composition of a complete level gauge.
For spare parts prices, please refer to the chapter "Spare parts".
For additional accessories please refer to the chapters "Special equipment" and "Electrical accessories and Switches"

FOR HIGHER PRESSURE RATINGS, PLEASE SEE ITA-6 TO ITA-13!

3.8.3 Order scheme ITA-5 & ITA-5.0

1. Type of level gauge [ITA-5 or ITA-5.0]	2. Distance between process connections in mm [or inches]	3. Design [Indication rail]	4 Distance between process connections > 5000 mm	5. Process connection top side	5.1 Surface process connection top side	5.2 Bolts & nuts process connection top side	6. Process connection bottom side	6.1 Surface process connection bottom side	6.2 Bolts & nuts process connection bottom side	7. Floats
ITA-5										
ITA-5.0										

3.9.1 ITA-6

Characteristics: PN40 / Float pipe and flange material: 1.4404

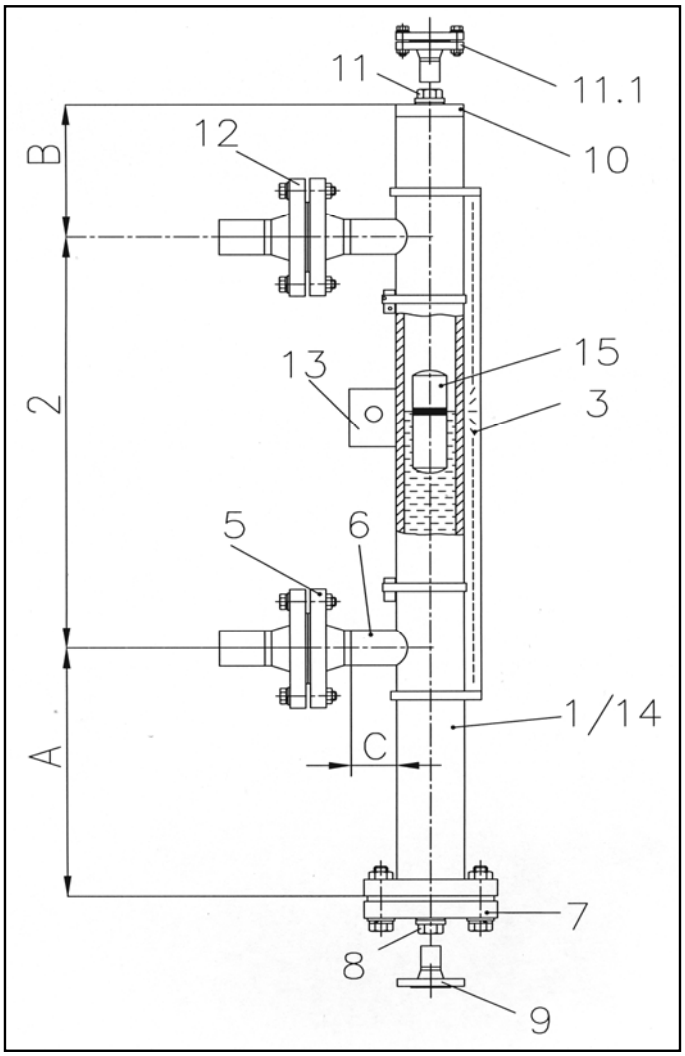

Key:

1 Float pipe welded, dimensions 60,3 x 2 mm
2 c to c distance
3 Design (indication rail)
5 Process connection side/side
6 Side studs welded with T pieces for 100 % X-ray testing
7 Float removal flange
8 Drain plug
9 Additional drain flange, open
10 Float pipe top end finish
11 Vent plug
12 Counter flanges
13 Additional bracket
14 Float pipe seamless
15 Float

Technical specifications magnetic level gauge type ITA-6

Principle:	Communicating tubes with magnetic float
Mounting position:	vertical
Measuring range:	**max. 5000 mm (one-part)** > 5000 mm 2- or multipart
Pipe diameter:	**60,3 x 2 mm welded,** 60,3 x 2 mm seamless 2" Sch10 **necking connection** or buttweld with T-pieces
Process connection:	to specify: **Flanges DN15…50 (1/2"…2" 300#),** **Welding or threaded stud**
Drain/Vent connections:	**Plug R1/2"** (for more please see order codes)
Pipe material:	**1.4404**; 1.4435; 1.4539; Hastelloy C4 (2.4610); Inconel 625 (2.4856); Inconel 825 (2.4858); Titan (3.7035) (other materials on request)
Flange material:	same as pipe material
Float material:	**1.4404** Titan, Titan/E-CTFE-coated
Operation temperature:	-50..+400 °C
Operation pressure:	max. 40 bar
Operation density:	min. 0,5723 kg/dm³ up to 20 bar process pressure min. 0,4370 kg/dm³ up to 40 bar process pressure
Viscosity:	max. 5000 mPa s
Bolts & Nuts:	A193/A194 B7/2H A193/A194 B8/8M **CS** hot dipped galvanized SS
Gasket	**PTFE up to 100 °C** **Klingersil C4400 up to 175 °C** **Graphit spiral wound up to 400 °C****
Indication rail:	Makrolon up to 120 °C Aluminium up to 400 °C 1.4301 up to 400 °C
Float types:	Cylindical, sealed type Length: **-270 mm** -130 mm -150 mm -210 mm -330 mm -430 mm -530 mm -630 mm
Standard dimensions:	-A = 240 mm* -B = 130 mm - C = 40 mm

Base equipment printed in bold letters!
***for densities < 0,5723 kg/dm³ enlarge the scale A**
****only with vent- and/or drain flanges DN50 resp. 2"**

3.9.2 ITA-6.0

Characteristics: PN40 / Float pipe: 1.4404 and flanges : CS

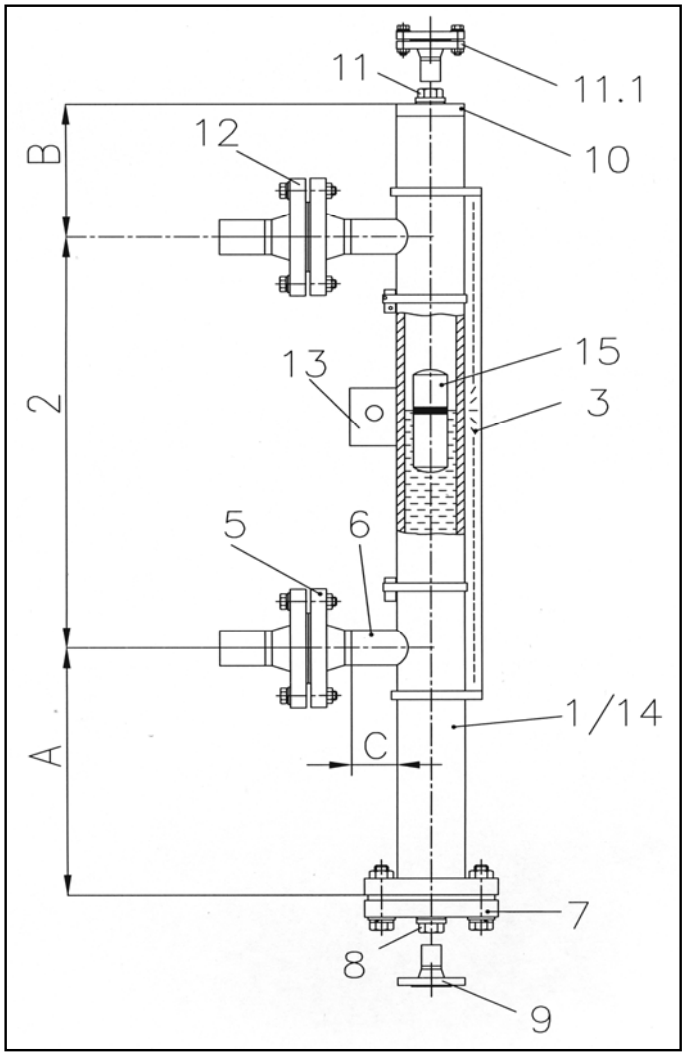

Key:

1 Float pipe welded, dimensions 60,3 x 2 mm
2 c to c distance
3 Design (indication rail)
5 Process connection side/side
6 Side studs welded with T pieces for 100 % X-ray testing
7 Float removal flange
8 Drain plug
9 Additional drain flange, open
10 Float pipe top end finish
11 Vent plug
12 Counter flanges
13 Additional bracket
14 Float pipe seamless
15 Float

Technical specifications magnetic level gauge type ITA-6.0

Principle:	Communicating tubes with magnetic float
Mounting position:	vertical
Measuring range:	**max. 5000 mm (one-part)** > 5000 mm 2- or multipart
Pipe diameter:	**60,3 x 2 mm welded,** 60,3 x 2 mm seamless 2" Sch10 **necking connection** or buttweld with T-pieces
Process connection:	to specify: **Flanges DN15…50 (1/2"…2" 300#),** **Welding or threaded stud**
Drain/Vent connections:	**Plug R1/2"** (for more please see order codes)
Pipe material:	**1.4404**; 1.4435; 1.4539; Hastelloy C4 (2.4610); Inconel 625 (2.4856); Inconel 825 (2.4858); Titan (3.7035) (other materials on request)
Flange material:	**CS**
Float material:	**1.4404** Titan, Titan/E-CTFE-coated
Operation temperature:	-50..+400 °C
Operation pressure:	max. 40 bar
Operation density:	min. 0,5723 kg/dm³ up to 20 bar process pressure min. 0,4370 kg/dm³ up to 40 bar process pressure
Viscosity:	max. 5000 mPa s
Bolts & Nuts:	A193/A194 B7/2H A193/A194 B8/8M **CS** hot dipped galvanized SS
Gasket	**PTFE up to 100 °C** **Klingersil C4400 up to 175 °C** **Graphit spiral wound up to 400 °C****
Indication rail:	Makrolon up to 120 °C Aluminium up to 400 °C 1.4301 up to 400 °C
Float types:	Cylindical, sealed type Length: **-270 mm** -130 mm -150 mm -210 mm -330 mm -430 mm -530 mm -630 mm
Standard dimensions:	-A = 240 mm* -B = 130 mm - C = 40 mm

Base equipment printed in bold letters!
***for densities < 0,5723 kg/dm³ enlarge the scale A**
****only with vent- and/or drain flanges DN50 resp. 2"**

3.9.3 Order codes ITA-6 & ITA-6.0

Mag. Level Gauge
ITA-6 & ITA-6.0 PN40/300 lbs

Order codes for mag. level gauge type ITA-6 & ITA-6.0 PN40/300 lbs

Code	Description
ITA-6 ITA-6.0	**1. Float pipe welded** **Dimensions 60,3 x 2 mm**
	2. c to c distance
L	c to c distance in mm
	3. Design
0	without indication rail each 100 mm
1	Indication rail material: Makrolon max. 120 °C; each 100 mm
2	Indication rail material: Aluminium max. 400 °C, pro 100 mm
3	Indication rail material: 1.4401 max. 400 °C, pro 100 mm
	4. c to c distance < 5000 mm
A	< 5000 mm - without flange connection; DN 32 PN 40
B	> 5000 mm - with flange connection; DN 32 PN 40
	5. Process connection side/side
Y	Welding connection (please specify)
Z	Threaded connection (please specify)
1	Flanges DN 15 PN 40
2	Flanges DN 20 PN 40
3	Flanges DN 25 PN 40
4	Flanges DN 32 PN 40
5	Flanges DN 40 PN 40
6	Flanges DN 50 PN 40
A	Flanges 1/2" ANSI 300 lbs
B	Flanges 3/4" ANSI 300 lbs
C	Flanges 1" ANSI 300 lbs
D	Flanges 1 1/4" ANSI 300 lbs
E	Flanges 1 1/2" ANSI 300 lbs
F	Flanges 2" ANSI 300 lbs
	5.1 Surface side flanges
0	without
A	Standard- Surface Form C
B	Standard-Surface RF
C	Surface Form D Rz=40
D	Surface Form E Rz=16
E	Surface RFSF (smooth finished)
F	Surface Nut (DIN2512)
G	Surface groove large
H	Surface Feder (DIN2512)
K	Surface tongue-large
L	Surface RTJ (ANSI) 1/2" bis 2"
	6. Side studs welded with T-pieces for 100 % X-ray testing
0	without
T	T-pieces

Mag. Level Gauge
ITA-6 & ITA-6.0 PN40/300 lbs

Order codes for mag. level gauge type ITA-6 & ITA-6.0 PN40/300 lbs

Code	Description
	7. Float removal flange (bottom side)
1	End cap (only if float removal flange (top side))
2	Flange DN 32 PN 40 incl. blind flange
3	Flange DN 50 PN 40 incl. blind flange
A	Flange 2" ANSI 300 lbs incl. blind flange
4	Flange DN 50 PN 40 prepared for shut off valve on side
B	Flange 2" ANSI 300 lbs prepared for shut off valve on side
	7.1 Surface float removal flange (bottom side) (only DN50 or 2")
0	without (Float removal flange (bottom side) = end cap or < DN50 or 2")
A	Standard- Surface Form C
B	Standard-Surface RF
C	Surface Form D Rz=40
D	Surface Form E Rz=16
E	Surface RFSF (smooth finished)
F	Surface groove (DIN2512)
G	Surface groove large
H	Surface tongue (DIN2512)
K	Surface tongue-large
L	Surface RTJ (ANSI) 1/2" bis 2"
	7.2 Bolts & Nuts float removal flange
0	without (Float removal flange (bottom side) = end cap)
41	M16 x 65 mm; mat. CS zinced; flange DN 32 PN 40; DIN 931
42	M16 x 65 mm; mat. SS 1.4301; flange DN 32 PN 40; DIN 931
43	M16 x 80 mm; mat. CS zinced; flange DN 32 PN 40; DIN 2510
44	M16 x 80 mm; mat. SS 1.4301; flange DN 32 PN 40; DIN 2510
65	M16 x 65 mm; mat. CS zinced; flange DN 50 PN 40; DIN 931
66	M16 x 65 mm; mat. SS 1.4301; flange DN 50 PN 40; DIN 931
67	M16 x 80 mm; mat. CS zinced; flange DN 50 PN 40; DIN 2510
68	M16 x 80 mm; mat. SS 1.4301; flange DN 50 PN 40; DIN 2510
6X	M16 x 65 mm; mat. PTFE-coated; flange DN 50 PN 40
6Z	M16 x 80 mm; mat. PTFE-coated; flange DN 50 PN 40
FA	5/8" x 83 mm; RF; mat. A193B7/A1942H zinced steel; flange 2" ANSI 300 lbs, ANSI B16.5
FB	5/8" x 89 mm; RF; mat. A193B8 / A1948M SS; flange 2" ANSI 300 lbs, ANSI B16.5
FC	5/8" x 102 mm; RTJ; mat. A193B7/A1942H zinced steel, flange 2" ANSI 300 lbs; ANSI B16.5
FD	5/8" x 102 mm; RTJ; mat. A193B8 / A1948M SS; flange 2" ANSI 300 lbs, ANSI B16.5
FT	5/8" x 89 mm; RF; mat. A193B8 / A1948M PTFE-coated; flange 2" ANSI 300 lbs, ANSI B16.5
FV	5/8" x 102 mm; RTJ; mat. A193B8/A1948M PTFE-coated, flange 2" ANSI 300 lbs; ANSI B16.5
	8. Drain plug
0	without
1	Drain plug G 1/2" with soft iron gasket
2	Drain plug 1/2" NPT
3	Drain plug 3/4" NPT
4	Drain plug 1" NPT

Mag. Level Gauge
ITA-6 & ITA-6.0 PN40/300 lbs

Order codes for mag. level gauge type ITA-6 & ITA-6.0 PN40/300 lbs

Code	Description
	9. Additional drain flange, open
0	without
1	Drain stud with flange DN 15 PN 40
2	Drain stud with flange DN 20 PN 40
3	Drain stud with flange DN 25 PN 40
4	Drain stud with flange DN 32 PN 40
5	Drain stud with flange DN 40 PN 40
A	Drain stud with flange 1/2" ANSI 300 lbs
B	Drain stud with flange 3/4" ANSI 300 lbs
C	Drain stud with flange 1" ANSI 300 lbs
D	Drain stud with flange 1 1/4" ANSI 300 lbs
E	Drain stud with flange 1 1/2" ANSI 300 lbs
	9.1 Drain flange with concentric reducer (X-ray testing)
0	without
1	DN 15 PN 40
2	DN 20 PN 40
3	DN 25 PN 40
4	DN 32 PN 40
5	DN 40 PN 40
A	1/2" ANSI 300 lbs
B	3/4" ANSI 300 lbs
C	1" ANSI 300 lbs
D	1 1/4" ANSI 300 lbs
E	1 1/2" ANSI 300 lbs
	9.2 Surface open drain flange
0	without (Float removal flange (bottom side) = end cap or < DN50 or 2")
A	Standard- Surface Form C
B	Standard-Surface RF
C	Surface Form D Rz=40
D	Surface Form E Rz=16
E	Surface RFSF (smooth finished)
F	Surface groove (DIN2512)
G	Surface groove large
H	Surface tongue (DIN2512)
K	Surface tongue-large
L	Surface RTJ (ANSI) 1/2" bis 2"
	10. Float pipe top end finish
1	End cap
2	Flange with blind flange DN 32 PN 40
3	Flange with blind flange DN 50 PN 40
4	Flange with blind flange 2" ANSI 300 lbs
	10.1 Surface float pipe top end finish flange (only DN50 or 2")
0	without (Float pipe top end finish = End cap or < DN50 or 2")
A	Standard- Surface Form C
B	Standard-Surface RF
C	Surface Form D Rz=40
D	Surface Form E Rz=16

Mag. Level Gauge
ITA-6 & ITA-6.0 PN40/300 lbs

Order codes for mag. level gauge type ITA-6 & ITA-6.0 PN40/300 lbs

Code	Description
	10.1 Surface float pipe top end finish flange (only DN50 or 2") (Continuation)
E	Surface RFSF (smooth finished)
F	Surface groove (DIN2512)
G	Surface groove large
H	Surface tongue (DIN2512)
K	Surface tongue-large
L	Surface RTJ (ANSI) 1/2" bis 2"
	10.2 Bolts & nuts float pipe top end finish flange
0	without (Float removal flange (bottom side) = end cap)
41	M16 x 65 mm; mat. CS zinced; flange DN 32 PN 40; DIN 931
42	M16 x 65 mm; mat. SS 1.4301; flange DN 32 PN 40; DIN 931
43	M16 x 80 mm; mat. CS zinced; flange DN 32 PN 40; DIN 2510
44	M16 x 80 mm; mat. SS 1.4301; flange DN 32 PN 40; DIN 2510
65	M16 x 65 mm; mat. CS zinced; flange DN 50 PN 40; DIN 931
66	M16 x 65 mm; mat. SS 1.4301; flange DN 50 PN 40; DIN 931
67	M16 x 80 mm; mat. CS zinced; flange DN 50 PN 40; DIN 2510
68	M16 x 80 mm; mat. SS 1.4301; flange DN 50 PN 40; DIN 2510
6X	M16 x 65 mm; mat. PTFE-coated; flange DN 50 PN 40
6Z	M16 x 80 mm; mat. PTFE-coated; flange DN 50 PN 40
FA	5/8" x 83 mm; RF; mat. A193B7/A1942H zinced steel; flange 2" ANSI 300 lbs, ANSI B16.5
FB	5/8" x 89 mm; RF; mat. A193B8 / A1948M SS; flange 2" ANSI 300 lbs, ANSI B16.5
FC	5/8" x 102 mm; RTJ; mat. A193B7/A1942H zinced steel, flange 2" ANSI 300 lbs; ANSI B16.5
FD	5/8" x 102 mm; RTJ; mat. A193B8 / A1948M SS; flange 2" ANSI 300 lbs, ANSI B16.5
FT	5/8" x 89 mm; RF; mat. A193B8 / A1948M PTFE-coated; flange 2" ANSI 300 lbs, ANSI B16.5
FV	5/8" x 102 mm; RTJ; mat. A193B8/A1948M PTFE-coated, flange 2" ANSI 300 lbs; ANSI B16.5
	11. Vent plug at top end
0	without
1	Vent plug G 1/2" with soft iron gasket
2	Vent plug 1/2" NPT
3	Vent plug 3/4" NPT
4	Vent plug 1" NPT
	11.1 Vent flange welded to end cap instead of vent plug
0	without
1	Flanged DN 15 PN 40 (socket weld construction to endcap)
2	Flanged DN 20 PN 40 (socket weld construction to endcap)
3	Flanged DN 25 PN 40 (socket weld construction to endcap)
4	Flanged DN 32 PN 40 (socket weld construction to endcap)
5	Flanged DN 40 PN 40 (socket weld construction to endcap)
6	Flanged DN 50 PN 40 (socket weld construction to endcap)
A	Flanged 1/2" ANSI 300 lbs (socket weld construction to endcap)
B	Flanged 3/4" ANSI 300 lbs (socket weld construction to endcap)
C	Flanged 1" ANSI 300 lbs (socket weld construction to endcap)
D	Flanged 1 1/4" ANSI 300 lbs (socket weld construction to endcap)
E	Flanged 1 1/2" ANSI 300 lbs (socket weld construction to endcap)
F	Flanged 2" ANSI 300 lbs (socket weld construction to endcap)

Mag. Level Gauge
ITA-6 & ITA-6.0 PN40/300 lbs

Order codes for mag. level gauge type ITA-6 & ITA-6.0 PN40/300 lbs

Code	Description
	11.2 Vent flange with concentric reducer (X-ray testing)
0	without
1	DN 15 PN 40
2	DN 20 PN 40
3	DN 25 PN 40
4	DN 32 PN 40
5	DN 40 PN 40
A	1/2" ANSI 300 lbs
B	3/4" ANSI 300 lbs
C	1" ANSI 300 lbs
D	1 1/4" ANSI 300 lbs
E	1 1/2" ANSI 300 lbs
	11.3 Surface vent flange welded to end cap(only DN50 or 2")
0	without (Vent flange welded to end cap = without)
A	Standard- Surface Form C
B	Standard-Surface RF
C	Surface Form D Rz=40
D	Surface Form E Rz=16
E	Surface RFSF (smooth finished)
F	Surface groove (DIN2512)
G	Surface groove large
H	Surface tongue (DIN2512)
K	Surface tongue-large
L	Surface RTJ (ANSI) 1/2" bis 2"
	12. Counter flanges
0	without
1	DN 15 PN 40
2	DN 20 PN 40
3	DN 25 PN 40
4	DN 32 PN 40
5	DN 40 PN 40
6	DN 50 PN 40
A	1/2" 300 lbs
B	3/4" 300 lbs
C	1" 300 lbs
D	1 1/4" 300 lbs
E	1 1/2" 300 lbs
F	2" 300 lbs
	12.1 Surface counter flanges
0	without
A	Standard- Surface Form C
B	Standard-Surface RF
C	Surface Form D Rz=40
D	Surface Form E Rz=16
E	Surface RFSF (smooth finished)

Mag. Level Gauge
ITA-6 & ITA-6.0 PN40/300 lbs

Order codes for mag. level gauge type ITA-6 & ITA-6.0 PN40/300 lbs

Code	Description
	12.1 Surface counter flanges (Continuation)
F	Surface groove (DIN2512)
G	Surface groove large
H	Surface tongue (DIN2512)
K	Surface tongue-large
L	Surface RTJ (ANSI) 1/2" bis 2"
	12.2 Bolts & Nuts counter flanges
0	without (Float removal flange (bottom side) = end cap)
41	M16 x 65 mm; mat. CS zinced; flange DN 32 PN 40; DIN 931
42	M16 x 65 mm; mat. SS 1.4301; flange DN 32 PN 40; DIN 931
43	M16 x 80 mm; mat. CS zinced; flange DN 32 PN 40; DIN 2510
44	M16 x 80 mm; mat. SS 1.4301; flange DN 32 PN 40; DIN 2510
65	M16 x 65 mm; mat. CS zinced; flange DN 50 PN 40; DIN 931
66	M16 x 65 mm; mat. SS 1.4301; flange DN 50 PN 40; DIN 931
67	M16 x 80 mm; mat. CS zinced; flange DN 50 PN 40; DIN 2510
68	M16 x 80 mm; mat. SS 1.4301; flange DN 50 PN 40; DIN 2510
6X	M16 x 65 mm; mat. PTFE-coated; flange DN 50 PN 40
6Z	M16 x 80 mm; mat. PTFE-coated; flange DN 50 PN 40
FA	5/8" x 83 mm; RF; mat. A193B7/A1942H zinced steel; flange 2" ANSI 300 lbs, ANSI B16.5
FB	5/8" x 89 mm; RF; mat. A193B8 / A1948M SS; flange 2" ANSI 300 lbs, ANSI B16.5
FC	5/8" x 102 mm; RTJ; mat. A193B7/A1942H zinced steel, flange 2" ANSI 300 lbs; ANSI B16.5
FD	5/8" x 102 mm; RTJ; mat. A193B8 / A1948M SS; flange 2" ANSI 300 lbs, ANSI B16.5
FT	5/8" x 89 mm; RF; mat. A193B8 / A1948M PTFE-coated; flange 2" ANSI 300 lbs, ANSI B16.5
FV	5/8" x 102 mm; RTJ; mat. A193B8/A1948M PTFE-coated, flange 2" ANSI 300 lbs; ANSI B16.5
	13. Additional bracket welded to the float pipe
0	without
H	Bracket
	14. Float pipe seamless
0	without
S	60,3 x 2 mm seamless; each 100 mm

For additional accessories please go to the chapters "Special equipment" and "Electrical accessories and Switches"

Mag. Level Gauge
ITA-6 & ITA-6.0 PN40/300 lbs
Float pipe and flanges material: 1.4404

Order codes for mag. Level Gauges type: ITA-6 & ITA-6.0 PN40/300 lbs

	Description						
Floats							
Code	**Pressure [bar]**	**Material**	**Diameter [mm]**	**Length [mm]**	**min. Density [kg/dm³]**	**vented [Y/N]**	**Notes**
6V0100K1	30	316L	52	125	1,5188	N	
6V0100K3	30	316L	52	125	1,0891	N	only with 316SS or Aluminium indication rail
6V0120K1	30	316L	52	145	1,2780	N	
6V0120K3	30	316L	52	145	0,9519	N	only with 316SS or Aluminium indication rail
6V0150K1	30	316L	52	175	1,0711	N	
6V0150K3	30	316L	52	175	0,8309	N	only with 316SS or Aluminium indication rail
6V0180K1	30	316L	52	205	0,9486	N	
6V0180K3	30	316L	52	205	0,8140	N	only with 316SS or Aluminium indication rail
6V0240K1	30	316L	52	265	0,7738	N	
6V0240K3	30	316L	52	265	0,6513	N	only with 316SS or Aluminium indication rail
6T0100K1	40	Titanium	50,8	125	1,3114	N	do not use for hydrogen and alcohol compounds
6T0100K3	40	Titanium	50,8	125	0,8975	N	only with 316SS or Aluminium indication rail do not use for hydrogen and alcohol compounds
6T0120K1	40	Titanium	50,8	145	1,1007	N	do not use for hydrogen and alcohol compounds
6T0120K3	40	Titanium	50,8	145	0,7837	N	only with 316SS or Aluminium indication rail do not use for hydrogen and alcohol compounds
6T0150K1	40	Titanium	50,8	175	0,9029	N	do not use for hydrogen and alcohol compounds
6T0150K3	40	Titanium	50,8	175	0,6763	N	only with 316SS or Aluminium indication rail do not use for hydrogen and alcohol compounds
6T0180K1	40	Titanium	50,8	205	0,7791	N	do not use for hydrogen and alcohol compounds
6T0180K3	40	Titanium	50,8	205	0,6100	N	only with 316SS or Aluminium indication rail do not use for hydrogen and alcohol compounds
6T0240K1	40	Titanium	50,8	265	0,6391	N	do not use for hydrogen and alcohol compounds
6T0240K3	40	Titanium	50,8	265	0,5187	N	only with 316SS or Aluminium indication rail do not use for hydrogen and alcohol compounds
6T0300K1	40	Titanium	50,8	325	0,5694	N	do not use for hydrogen and alcohol compounds
6T0300K3	40	Titanium	50,8	325	0,4812	N	only with 316SS or Aluminium indication rail do not use for hydrogen and alcohol compounds
6T0400K1	40	Titanium	50,8	425	0,5300	N	do not use for hydrogen and alcohol compounds
6T0400K3	40	Titanium	50,8	425	0,4373	N	only with 316SS or Aluminium indication rail do not use for hydrogen and alcohol compounds
6T0500K1	40	Titanium	50,8	525	0,4463	N	do not use for hydrogen and alcohol compounds
6T0500K3	40	Titanium	50,8	525	0,4098	N	only with 316SS or Aluminium indication rail do not use for hydrogen and alcohol compounds
6T0600K1	40	Titanium	50,8	625	0,4370	N	do not use for hydrogen and alcohol compounds
6T0600K3	40	Titanium	50,8	625	0,3834	N	only with 316SS or Aluminium indication rail do not use for hydrogen and alcohol compounds
6H0200K1	40	Titanium, Halar-coatec	52	265	0,7674	N	
6H0200K1	40	Titanium, Halar-coatec	52	265	0,6470	N	only with 316SS or Aluminium indication rail
6HC012K1	40	Hastelloy C4	52	145		N	
6HC024K1	40	Hastelloy C4	52	265		N	
6HC024K3	40	Hastelloy C4	52	265		N	only with 316SS or Aluminium indication rail

For additional accessories please refer to the chapters "Special equipment" and "Electrical accessories and Switches"

3.9.3 Order code scheme for ITA-6 & ITA-6.0

1. Type of level gauge ITA-6 or ITA-6.0	2. C to C distance in mm [or inches]	3. Design	4. C to C distance > 5000 mm	5. Process connection [side/side]	5.1 Surface side flanges	6. Side studs welded with T-pieces for 100 % X-ray-testing	7. Float removal flange	7.1 Surface float removal flange	7.2 Bolts & nuts float removal flange	8. Drain plug	9. Additional drain flange, open
ITA-6											
ITA-6.0											

9.1 Drain flange with concentric reducer (X-ray testing)	9.2 Surface open drain flange	10. Float pipe top end finish	10.1 Surface top end finish flange	10.2 Bolts and nuts rop end finish flange	11. Vent plug at top end	11.1 Vent flange welded to end cap instead of vent plug	11.2 Vent flange with concentric reducer (X-ray testing)	11.3 Surface vent flange welded to end cap	12. Counter flanges	12.1 Surface counter flanges	12.2 Bolts & nuts counter flanges	13. Additional bracket welded to the float pipe	14. Float pipe seamless	15. Float

3.10.1 ITA-6 Cryo

Characteristics: PN16 / Float pipe and flange material: 1.4404

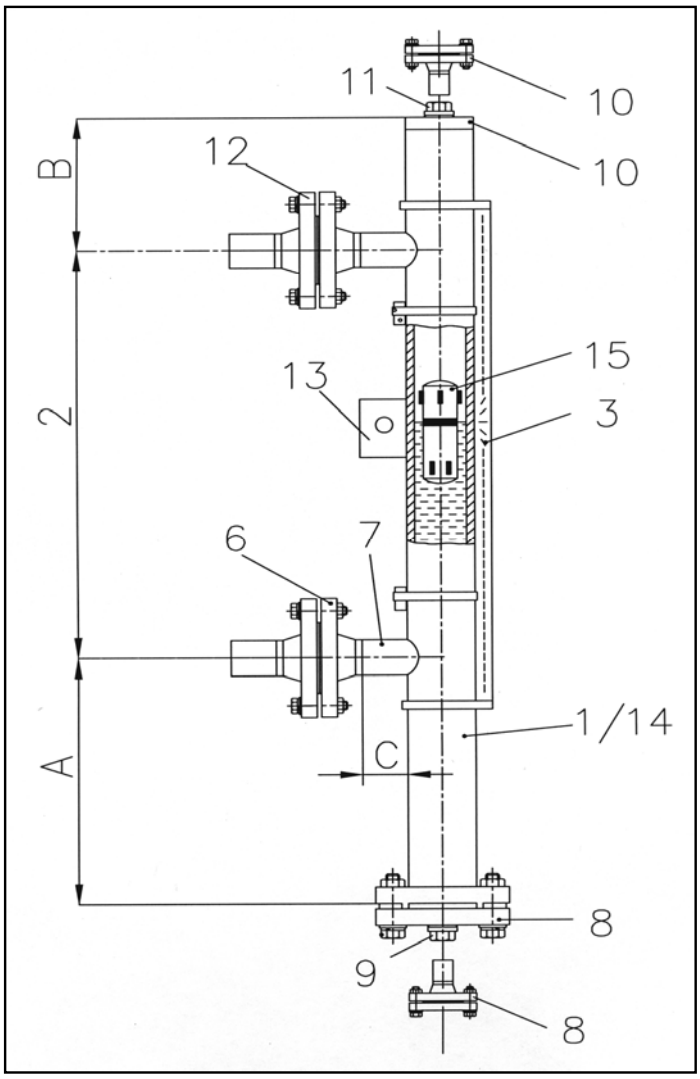

Key:

1 Float pipe welded, dimensions 60,3 x 2 mm
2 c to c distance
3 Design (indication rail)
4 Armaflex® insulation
6 Process connection side/side
7 Side studs welded with T pieces for 100 % X-ray testing
8 Float removal flange
9 Drain plug
10 Additional drain flange, open
11 Float pipe top end finish
12 Vent plug
13 Counter flanges
14 Additional bracket
15 Float pipe seamless
16 Float

Technical specifications magnetic level gauge type ITA-6 Cryo

Principle:	Communicating tubes with magnetic float
Mounting position:	vertical
Measuring range:	**max. 5000 mm (one-part)** > 5000 mm 2- or multipart
Pipe diameter:	**60,3 x 2 mm welded**
Process connection:	to specify: **Flanges DN15…50 (1/2"…2" 300#),**
Drain/Vent connections:	**Plug R1/2"** (for more please see order codes)
Pipe material:	**1.4404**; 1.4435; 1.4539; Hastelloy C4 (2.4610); Inconel 625 (2.4856); Inconel 825 (2.4858); Titan (3.7035) (other materials on request)
Flange material:	same as pipe material
Float material:	**1.4404** Titan, Titan/E-CTFE-coated
Operation temperature:	-200..+100 °C
Operation pressure:	max. 40 bar
Operation density:	min. 0,4693 kg/dm³
Viscosity:	max. 5000 mPa s
Bolts & Nuts:	**CS** (min. -10°C) SS or material in acc. with DIN 17280
Gasket	**PTFE min -150 °C** **Klingersil TOP Chem 2000**
Indication rail:	**Aluminium** 1.4301
Float types:	Cylindical, sealed type Dimensions:
Standard dimensions:	**- Ø50,8 x 270 mm*** A = 240 mm* B = 130 mm C = 40 mm

Base equipment printed in bold letters!
***not for vaporizing media (e.g. ammonia)**

3.10.2 Order codes ITA-6 Cryo

Mag. Level Gauge
ITA-6-Cryo for cryogenic applications

Order codes for mag. level gauge type ITA-6-Cryo for cryogenic applications

Code	Description
ITA-6-Cryo	**1. Float pipe welded Dimensions 60,3 x 2 mm**
	2. c to c distance
L	c to c distance in mm
	3. Design
0	without indication rail each 100 mm
1	Indication rail material: Aluminium max. 400 °C, pro 100 mm
2	Indication rail material: 1.4401 max. 400 °C, pro 100 mm
	4. Armaflex-Insulation
0	without Armaflex insulation
F	Thickness: 12 mm, bis -15 °C
R	Thickness: 30 mm, bis -50 °C
T	Thickness: 70 mm, bis -200 °C incl. Makrolon window
	5. C to C distance < 5000 mm
A	< 5000 mm - without flange connection; DN 32 PN 40
B	> 5000 mm - with flange connection; DN 32 PN 40
	6. Process connection side/side
Y	Welding connection (please specify)
Z	Threaded connection (please specify)
1	Flanges DN 15 PN 40
2	Flanges DN 20 PN 40
3	Flanges DN 25 PN 40
4	Flanges DN 32 PN 40
5	Flanges DN 40 PN 40
6	Flanges DN 50 PN 40
A	Flanges 1/2" ANSI 300 lbs
B	Flanges 3/4" ANSI 300 lbs
C	Flanges 1" ANSI 300 lbs
D	Flanges 1 1/4" ANSI 300 lbs
E	Flanges 1 1/2" ANSI 300 lbs
F	Flanges 2" ANSI 300 lbs
	6.1 Surface side flanges
0	without
F	Groove (DIN2512)
H	Tongue (DIN2512)
	7. Side studs welded with T-pieces for 100 % X-ray testing
0	without
T	T-pieces
	8. Float removal flange (bottom side)
1	End cap (only if float removal flange (top side))
2	Flange DN 50 PN 40 incl. blind flange
3	Flange 2" ANSI 300 lbs incl. blind flange

Mag. Level Gauge
ITA-6-Cryo for cryogenic applications

Order codes for mag. level gauge type ITA-6-Cryo for cryogenic applications

Code	Description
	8.1 Surface float removal flange (bottom side) (only DN50 or 2")
0	without (Float removal flange (bottom side) = end cap or < DN50 or 2")
F	Groove (DIN2512)
H	Tongue (DIN2512)
	8.2 Bolts & Nuts float removal flange
0	without (Float removal flange (bottom side) = end cap)
65	M16 x 65 mm; mat. CS zinced; flange DN 50 PN 40; DIN 931
66	M16 x 65 mm; mat. SS 1.4301; flange DN 50 PN 40; DIN 931
67	M16 x 80 mm; mat. CS zinced; flange DN 50 PN 40; DIN 2510
68	M16 x 80 mm; mat. SS 1.4301; flange DN 50 PN 40; DIN 2510
6X	M16 x 65 mm; mat. PTFE-coated; flange DN 50 PN 40
6Z	M16 x 80 mm; mat. PTFE-coated; flange DN 50 PN 40
FA	5/8" x 83 mm; RF; mat. A193B7/A1942H zinced steel; flange 2" ANSI 300 lbs, ANSI B16.5
FB	5/8" x 89 mm; RF; mat. A193B8 / A1948M SS; flange 2" ANSI 300 lbs, ANSI B16.5
FC	5/8" x 102 mm; RTJ; mat. A193B7/A1942H zinced steel, flange 2" ANSI 300 lbs; ANSI B16.5
FD	5/8" x 102 mm; RTJ; mat. A193B8 / A1948M SS; flange 2" ANSI 300 lbs, ANSI B16.5
FT	5/8" x 89 mm; RF; mat. A193B8 / A1948M PTFE-coated; flange 2" ANSI 300 lbs, ANSI B16.5
FV	5/8" x 102 mm; RTJ; mat. A193B8/A1948M PTFE-coated, flange 2" ANSI 300 lbs; ANSI B16.5
	9. Drain plug
0	without
1	G 1/2" DIN1910
	10. Float pipe top end finish
1	End cap
2	Flange with blind flange DN 50 PN 40
A	Flange with blind flange 2" ANSI 300 lbs
	10.1 Surface float pipe top end finish flange (only DN50 or 2")
0	without (Float pipe top end finish = End cap or < DN50 or 2")
F	Groove (DIN2512)
H	Tongue (DIN2512)
	10.2 Bolts & nuts float pipe top end finish flange
0	without (Float pipe top end = end cap)
65	M16 x 65 mm; mat. CS zinced; flange DN 50 PN 40; DIN 931
66	M16 x 65 mm; mat. SS 1.4301; flange DN 50 PN 40; DIN 931
67	M16 x 80 mm; mat. CS zinced; flange DN 50 PN 40; DIN 2510
68	M16 x 80 mm; mat. SS 1.4301; flange DN 50 PN 40; DIN 2510
6X	M16 x 65 mm; mat. PTFE-coated; flange DN 50 PN 40
6Z	M16 x 80 mm; mat. PTFE-coated; flange DN 50 PN 40
FA	5/8" x 83 mm; RF; mat. A193B7/A1942H zinced steel; flange 2" ANSI 300 lbs, ANSI B16.5
FB	5/8" x 89 mm; RF; mat. A193B8 / A1948M SS; flange 2" ANSI 300 lbs, ANSI B16.5
FC	5/8" x 102 mm; RTJ; mat. A193B7/A1942H zinced steel, flange 2" ANSI 300 lbs; ANSI B16.5
FD	5/8" x 102 mm; RTJ; mat. A193B8 / A1948M SS; flange 2" ANSI 300 lbs, ANSI B16.5
FT	5/8" x 89 mm; RF; mat. A193B8 / A1948M PTFE-coated; flange 2" ANSI 300 lbs, ANSI B16.5
FV	5/8" x 102 mm; RTJ; mat. A193B8/A1948M PTFE-coated, flange 2" ANSI 300 lbs; ANSI B16.5
	11. Vent plug on topside
0	without
1	Vent plug G 1/2" with soft iron gasket

Mag. Level Gauge
ITA-6-Cryo for cryogenic applications

Order codes for mag. level gauge type ITA-6-Cryo for cryogenic applications

Code	Description
	12. Counter flanges
0	without
1	DN 15 PN 40
2	DN 20 PN 40
3	DN 25 PN 40
4	DN 32 PN 40
5	DN 40 PN 40
6	DN 50 PN 40
A	1/2" 300 lbs
B	3/4" 300 lbs
C	1" 300 lbs
D	1 1/4" 300 lbs
E	1 1/2" 300 lbs
F	2" 300 lbs
	12.1 Surface counter flanges
0	without
F	Groove (DIN2512)
H	Tongue (DIN2512)
	12.2 Bolts & Nuts counter flanges
0	without
65	M16 x 65 mm; mat. CS zinced; flange DN 50 PN 40; DIN 931
66	M16 x 65 mm; mat. SS 1.4301; flange DN 50 PN 40; DIN 931
67	M16 x 80 mm; mat. CS zinced; flange DN 50 PN 40; DIN 2510
68	M16 x 80 mm; mat. SS 1.4301; flange DN 50 PN 40; DIN 2510
6X	M16 x 65 mm; mat. PTFE-coated; flange DN 50 PN 40
6Z	M16 x 80 mm; mat. PTFE-coated; flange DN 50 PN 40
FA	5/8" x 83 mm; RF; mat. A193B7/A1942H zinced steel; flange 2" ANSI 300 lbs, ANSI B16.5
FB	5/8" x 89 mm; RF; mat. A193B8 / A1948M SS; flange 2" ANSI 300 lbs, ANSI B16.5
FC	5/8" x 102 mm; RTJ; mat. A193B7/A1942H zinced steel, flange 2" ANSI 300 lbs; ANSI B16.5
FD	5/8" x 102 mm; RTJ; mat. A193B8 / A1948M SS; flange 2" ANSI 300 lbs, ANSI B16.5
FT	5/8" x 89 mm; RF; mat. A193B8 / A1948M PTFE-coated; flange 2" ANSI 300 lbs, ANSI B16.5
FV	5/8" x 102 mm; RTJ; mat. A193B8/A1948M PTFE-coated, flange 2" ANSI 300 lbs; ANSI B16.5
	13. Additional bracket welded to the float pipe
0	without
H	Bracket
	14. Float pipe seamless
0	without
S	60,3 x 2 mm seamless; each 100 mm

Mag. Level Gauge
ITA-6-Cryo for cryogenic applications
Float pipe and flanges material: 1.4404

Order codees for mag. Level Gauges type: ITA-6-Cryo for cryogenic applications

	Description						
Floats							
Code	**Pressure [bar]**	**Material**	**Diameter [mm]**	**Length [mm]**	**min. Density [kg/dm³]**	**vented [Y/N]**	**Notes**
6C0240K1	40	Titanium	50,8	265	0,6391	N	without spacers; do not use with alcohol or hydrogen compound
6C0500K1	40	Titanium	45	525	0,5981	N	with spacers; do not use with alcohol or hydrogen compound
6C0300K3	40	Titanium	45	525	0,5486	N	with spacers; only with Aluminium or SS indication rail; do not use with alcohol or hydrogen compound

For additional accessories please refer to the chapters "Special equipment" and "Electrical accessories and Switches"

3.10.2 Order code scheme for ITA-3 Cryo

1. Type of level gauge ITA-3 Cryo											
	2. C to C distance in mm [or inches]										
		3. Design									
			4. Armaflex insulation								
				5. C to C distance > 5000 mm							
					6. Process connection [side/side]						
						6.1 Surface side flanges					
							7. Side studs welded with T-pieces for 100 % X-ray-testing				
								8. Float removal flangeSurface float removal flange			
									8.1 Surface float removal flange		
										8.2 Bolts & nuts float removal flange	
											9. Drain plug
ITA-3-Cryo											

10.Float pipe top end finish										
	10.1 Surface top end finish flange									
		11. Vent plug at top end								
			12. Counter flanges							
				12.1 Surface counter flanges						
					12.2 Bolts & nuts counter flanges					
						12.1 Vent flange welded to end cap instead of vent plug				
							12.2 Surface vent flange			
								13. Additional bracket welded to the float pipe		
									14. Float pipe seamless	
										15. Float

3.11.1 ITA-6 CR64

Characteristics: PN40 / Float pipe and flange material: 1.4404

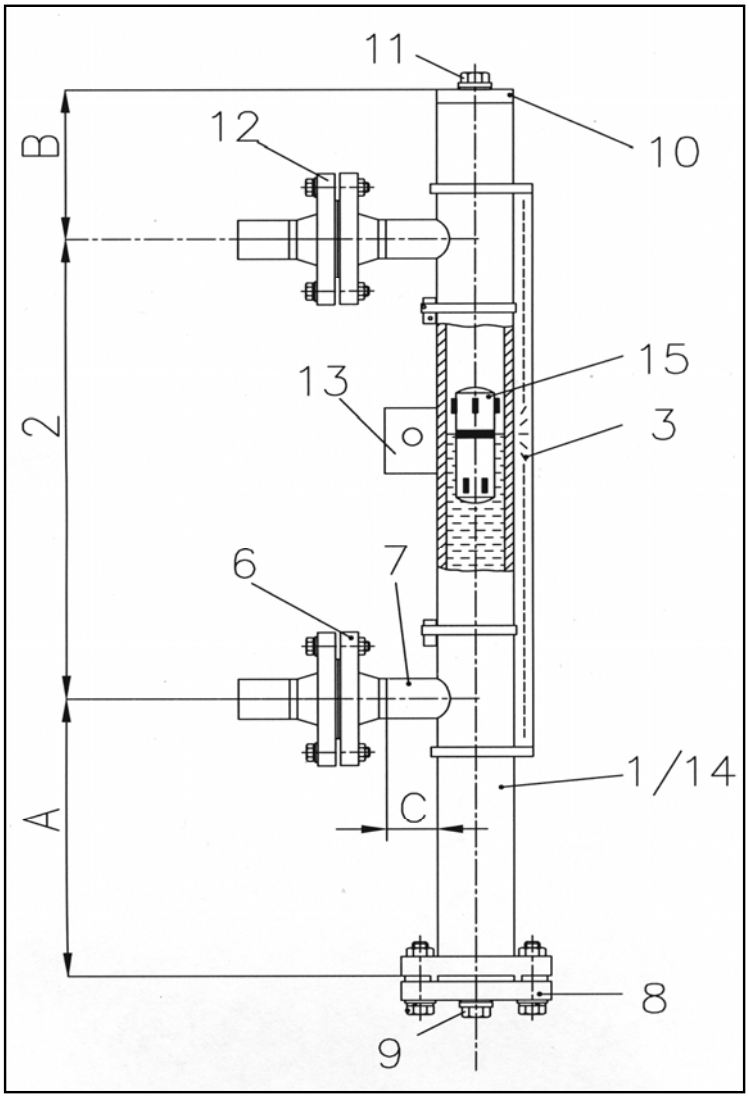

Key:

1 Float pipe welded, dimensions 64 x 2 mm
2 c to c distance
3 Design (indication rail)
4 Armaflex® insulation
6 Process connection side/side
7 Side studs welded with T pieces for 100 % X-ray testing
8 Float removal flange
9 Drain plug
10 Additional drain flange, open
11 Float pipe top end finish
12 Vent plug
13 Counter flanges
14 Additional bracket
15 Float pipe seamless
16 Float

Technical specifications magnetic level gauge type ITA-6 CR64

Principle:	Communicating tubes with magnetic float
Mounting position:	vertical
Measuring range:	**max. 5000 mm (one-part)** > 5000 mm 2- or multipart
Pipe diameter:	**64 x 2 mm welded,**
Process connection:	to specify: **Flanges DN15…50 (1/2"…2" 300#),** **Welding or threaded stud**
Drain/Vent connections:	**Plug G1/2"** (for more please see order codes)
Pipe material:	**1.4404**; 1.4435; 1.4539; Hastelloy C4 (2.4610); Inconel 625 (2.4856); Inconel 825 (2.4858); Titan (3.7035) (other materials on request)
Flange material:	same as pipe material
Float material:	**1.4404** Titan, Titan/E-CTFE-coated
Operation temperature:	-200..+100 °C
Operation pressure:	max. 40 bar
Operation density:	min. 0,4693 kg/dm³
Viscosity:	max. 5000 mPa s
Bolts & Nuts:	**CS** (min. -10°C) SS or material in acc. with DIN 17280
Gasket	**PTFE min -150 °C** **Klingersil TOP Chem 2000**
Indication rail:	**Aluminium** 1.4301
Float types:	Cylindical, sealed type Length: **-∅50,8 x 270 mm*** -∅50,8 x 530 mm
Standard dimensions:	A = 240 mm* B = 130 mm C = 40 mm

Base equipment printed in bold letters!
***not for vaporizing media (e.g. ammonia)**

3.11.2 Order codes ITA-6 CR64

Mag. Level Gauge
ITA-6-CR64 for cryogenic applications
Float pipe and flange material: 1.4404

Order codes for mag. level gauge type ITA-6-CR64 for cryogenic applications

Code	Description
ITA-3-CR64	**1. Float pipe welded** **Dimensions 64 x 2 mm**
	2. c to c distance
L	c to c distance in mm
	3. Design
0	without indication rail each 100 mm
1	Indication rail material: Aluminium max. 400 °C, pro 100 mm
2	Indication rail material: 1.4401 max. 400 °C, pro 100 mm
	4. Armaflex-Insulation
0	without Armaflex insulation
F	Thickness: 12 mm, bis -15 °C
R	Thickness: 30 mm, bis -50 °C
T	Thickness: 70 mm, bis -200 °C incl. Makrolon window
	5. C to C distance < 5000 mm
A	< 5000 mm - without flange connection; DN 32 PN 40
B	> 5000 mm - with flange connection; DN 32 PN 40
	6. Process connection side/side
Y	Welding connection (please specify)
Z	Threaded connection (please specify)
1	Flanges DN 15 PN 40
2	Flanges DN 20 PN 40
3	Flanges DN 25 PN 40
4	Flanges DN 32 PN 40
5	Flanges DN 40 PN 40
6	Flanges DN 50 PN 40
A	Flanges 1/2" ANSI 300 lbs
B	Flanges 3/4" ANSI 300 lbs
C	Flanges 1" ANSI 300 lbs
D	Flanges 1 1/4" ANSI 300 lbs
E	Flanges 1 1/2" ANSI 300 lbs
F	Flanges 2" ANSI 300 lbs
	6.1 Surface side flanges
0	without
F	Groove (DIN2512)
H	Tongue (DIN2512)
	7. Side studs welded with T-pieces for 100 % X-ray testing
0	without
T	T-pieces
	8. Float removal flange (bottom side)
1	End cap (only if float removal flange (top side))
2	Flange DN 50 PN 40 incl. blind flange
A	Flange 2" ANSI 300 lbs incl. blind flange

Mag. Level Gauge
ITA-6-CR64 for cryogenic applications
Float pipe and flange material: 1.4404

Order codes for mag. level gauge type ITA-6-CR64 for cryogenic applications

Code	Description
	8.1 Surface float removal flange (bottom side) (only DN50 or 2")
0	without (Float removal flange (bottom side) = end cap or < DN50 or 2")
F	Groove (DIN2512)
H	Tongue (DIN2512)
	8.2 Bolts & Nuts float removal flange
0	without (Float removal flange (bottom side) = end cap)
65	M16 x 65 mm; mat. CS zinced; flange DN 50 PN 40; DIN 931
66	M16 x 65 mm; mat. SS 1.4301; flange DN 50 PN 40; DIN 931
67	M16 x 80 mm; mat. CS zinced; flange DN 50 PN 40; DIN 2510
68	M16 x 80 mm; mat. SS 1.4301; flange DN 50 PN 40; DIN 2510
6X	M16 x 65 mm; mat. PTFE-coated; flange DN 50 PN 40
6Z	M16 x 80 mm; mat. PTFE-coated; flange DN 50 PN 40
FA	5/8" x 83 mm; RF; mat. A193B7/A1942H zinced steel; flange 2" ANSI 300 lbs, ANSI B16.5
FB	5/8" x 89 mm; RF; mat. A193B8 / A1948M SS; flange 2" ANSI 300 lbs, ANSI B16.5
FC	5/8" x 102 mm; RTJ; mat. A193B7/A1942H zinced steel, flange 2" ANSI 300 lbs; ANSI B16.5
FD	5/8" x 102 mm; RTJ; mat. A193B8 / A1948M SS; flange 2" ANSI 300 lbs, ANSI B16.5
FT	5/8" x 89 mm; RF; mat. A193B8 / A1948M PTFE-coated; flange 2" ANSI 300 lbs, ANSI B16.5
FV	5/8" x 102 mm; RTJ; mat. A193B8/A1948M PTFE-coated, flange 2" ANSI 300 lbs; ANSI B16.5
	9. Drain plug
0	without
1	G 1/2" DIN1910
	10. Float pipe top end finish
1	End cap
2	Flange with blind flange DN 50 PN 40
A	Flange with blind flange 2" ANSI 300 lbs
	10.1 Surface float pipe top end finish flange (only DN50 or 2")
0	without (Float pipe top end finish = End cap or < DN50 or 2")
F	Groove (DIN2512)
H	Tongue (DIN2512)
	10.2 Bolts & nuts float pipe top end finish flange
0	without (Float pipe top end = end cap)
65	M16 x 65 mm; mat. CS zinced; flange DN 50 PN 40; DIN 931
66	M16 x 65 mm; mat. SS 1.4301; flange DN 50 PN 40; DIN 931
67	M16 x 80 mm; mat. CS zinced; flange DN 50 PN 40; DIN 2510
68	M16 x 80 mm; mat. SS 1.4301; flange DN 50 PN 40; DIN 2510
6X	M16 x 65 mm; mat. PTFE-coated; flange DN 50 PN 40
6Z	M16 x 80 mm; mat. PTFE-coated; flange DN 50 PN 40
FA	5/8" x 83 mm; RF; mat. A193B7/A1942H zinced steel; flange 2" ANSI 300 lbs, ANSI B16.5
FB	5/8" x 89 mm; RF; mat. A193B8 / A1948M SS; flange 2" ANSI 300 lbs, ANSI B16.5
FC	5/8" x 102 mm; RTJ; mat. A193B7/A1942H zinced steel, flange 2" ANSI 300 lbs; ANSI B16.5
FD	5/8" x 102 mm; RTJ; mat. A193B8 / A1948M SS; flange 2" ANSI 300 lbs, ANSI B16.5
FT	5/8" x 89 mm; RF; mat. A193B8 / A1948M PTFE-coated; flange 2" ANSI 300 lbs, ANSI B16.5
FV	5/8" x 102 mm; RTJ; mat. A193B8/A1948M PTFE-coated, flange 2" ANSI 300 lbs; ANSI B16.5

Mag. Level Gauge
ITA-6-CR64 for cryogenic applications
Float pipe and flange material: 1.4404

Order codes for mag. level gauge type ITA-6-CR64 for cryogenic applications

Code	Description
	11. Vent plug on topside
0	without
1	Vent plug G 1/2" with soft iron gasket
	12. Counter flanges
0	without
1	DN 15 PN 40
2	DN 20 PN 40
3	DN 25 PN 40
4	DN 32 PN 40
5	DN 40 PN 40
6	DN 50 PN 40
A	1/2" 300 lbs
B	3/4" 300 lbs
C	1" 300 lbs
D	1 1/4" 300 lbs
E	1 1/2" 300 lbs
F	2" 300 lbs
	12.1 Surface counter flanges
0	without
F	Groove (DIN2512)
H	Tongue (DIN2512)
	12.2 Bolts & Nuts counter flanges
0	without
65	M16 x 65 mm; mat. CS zinced; flange DN 50 PN 40; DIN 931
66	M16 x 65 mm; mat. SS 1.4301; flange DN 50 PN 40; DIN 931
67	M16 x 80 mm; mat. CS zinced; flange DN 50 PN 40; DIN 2510
68	M16 x 80 mm; mat. SS 1.4301; flange DN 50 PN 40; DIN 2510
6X	M16 x 65 mm; mat. PTFE-coated; flange DN 50 PN 40
6Z	M16 x 80 mm; mat. PTFE-coated; flange DN 50 PN 40
FA	5/8" x 83 mm; RF; mat. A193B7/A1942H zinced steel; flange 2" ANSI 300 lbs, ANSI B16.5
FB	5/8" x 89 mm; RF; mat. A193B8 / A1948M SS; flange 2" ANSI 300 lbs, ANSI B16.5
FC	5/8" x 102 mm; RTJ; mat. A193B7/A1942H zinced steel, flange 2" ANSI 300 lbs; ANSI B16.5
FD	5/8" x 102 mm; RTJ; mat. A193B8 / A1948M SS; flange 2" ANSI 300 lbs, ANSI B16.5
FT	5/8" x 89 mm; RF; mat. A193B8 / A1948M PTFE-coated; flange 2" ANSI 300 lbs, ANSI B16.5
FV	5/8" x 102 mm; RTJ; mat. A193B8/A1948M PTFE-coated, flange 2" ANSI 300 lbs; ANSI B16.5
	13. Additional bracket welded to the float pipe
0	without
H	Bracket
	14. Float pipe seamless
0	without
S	60,3 x 2 mm seamless; each 100 mm

Mag. Level Gauge
ITA-6-CR64 for cryogenic applications
Float pipe and flanges material: 1.4404

Order codes for mag. Level Gauges type: ITA-6-CR64 for cryogenic applications

	Description						
Floats							
Code	**Pressure [bar]**	**Material**	**Diameter [mm]**	**Length [mm]**	**min. Density [kg/dm³]**	**vented [Y/N]**	**Notes**
6C0240K1	40	Titanium	50,8	265	0,6391	N	without spacers; do not use with alcohol or hydrogen compounc
6C0500K1	40	Titanium	45	525	0,5981	N	with spacers; do not use with alcohol or hydrogen compounc

For additional accessories please refer to the chapters "Special equipment" and "Electrical accessories and Switches"

3.11.2 Order code scheme for ITA-3 Cryo

1. Type of level gauge ITA-3 Cryo											
	2. C to C distance in mm [or inches]										
		3. Design									
			4. Armaflex insulation								
				5. C to C distance > 5000 mm							
					6. Process connection [side/side]						
						6.1 Surface side flanges					
							7. Side studs welded with T-pieces for 100 % X-ray-testing				
								8. Float removal flangeSurface float removal flange			
									8.1 Surface float removal flange		
										8.2 Bolts & nuts float removal flange	
											9. Drain plug
ITA-3-Cryo											

10.Float pipe top end finish										
	10.1 Surface top end finish flange									
		11. Vent plug at top end								
			12. Counter flanges							
				12.1 Surface counter flanges						
					12.2 Bolts & nuts counter flanges					
						12.1 Vent flange welded to end cap instead of vent plug				
							12.2 Surface vent flange			
								13. Additional bracket welded to the float pipe		
									14. Float pipe seamless	
										15. Float

3.12.1 ITA-7

Characteristics: PN64 / Float pipe and flange material: 1.4404

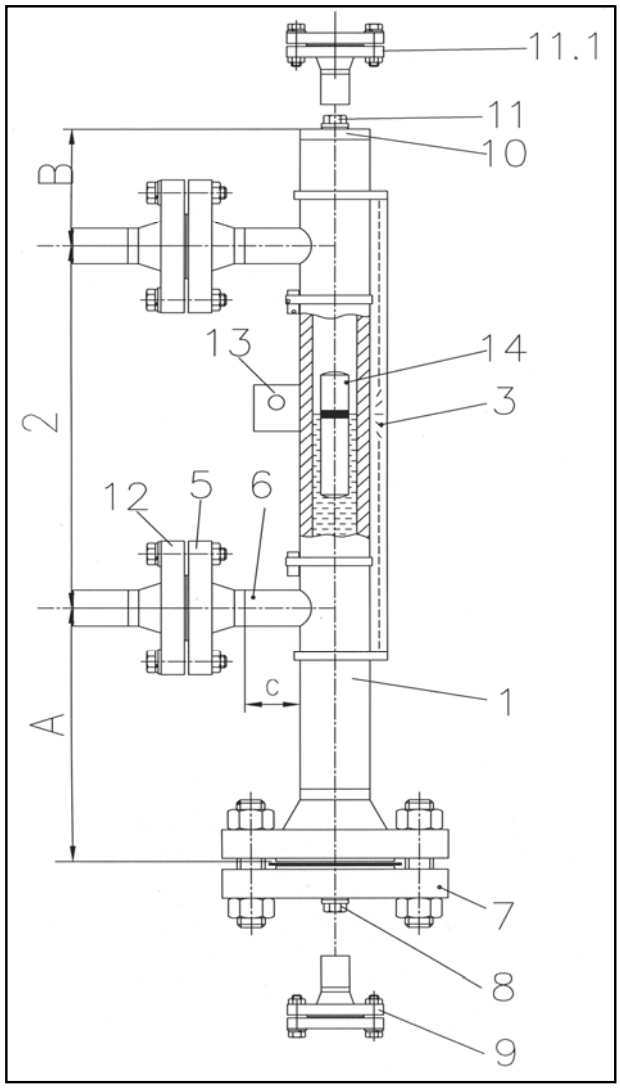

Key:

1 Float pipe welded, dimensions 60,3 x 2 mm
2 c to c distance
3 Design (indication rail)
5 Process connection side/side
6 Side studs welded with T pieces for 100 % X-ray testing
7 Float removal flange
8 Drain plug
9 Additional drain flange, open
10 Float pipe top end finish
11 Vent plug
12 Counter flanges
13 Additional bracket
14 Float pipe seamless
15 Float

Technical specifications magnetic level gauge type ITA-7

Principle:	Communicating tubes with magnetic float
Mounting position:	vertical
Measuring range:	**max. 5000 mm (one-part)** > 5000 mm 2- or multipart
Pipe diameter:	**60,3 x 2 mm welded,** **butt-weld connection wie T-pieces**
Process connection:	to specify: **Flanges DN15…50 (1/2"…2" 300#),** **Welding or threaded stud**
Drain/Vent connections:	**Plug 1/2"NPT**
Pipe material:	**1.4404**; 1.4435; 1.4539; Hastelloy C4 (2.4610); Inconel 625 (2.4856); Inconel 825 (2.4858); Titan (3.7035) (other materials on request)
Flange material:	same as pipe material
Float material:	**Titanium****, Titan/E-CTFE-coated
Operation temperature:	-50..+400 °C
Operation pressure:	max. 64 bar
Operation density:	min. 0,4243 kg/dm³
Viscosity:	max. 5000 mPa s
Bolts & Nuts:	**CS** SS
Gasket	**Spiral wound, 316Ti** **Cam profile, 316Ti**
Indication rail:	Makrolon up to 120 °C Aluminium up to 400 °C 1.4301 up to 400 °C
Float types:	Cylindical, sealed type Length: **-270 mm** -330 mm -530 mm -630 mm
Standard dimensions:	-A = 240 mm* -B = 130 mm - C = 40 mm

Base equipment printed in bold letters!
***for densities < 0,4243 kg/dm³ enlarge the scale A**
****not for use for hydrogen or alcohol-compounds**

3.12.2 ITA-7.0

Characteristics: PN64 / Float pipe: 1.4404 and flanges : CS

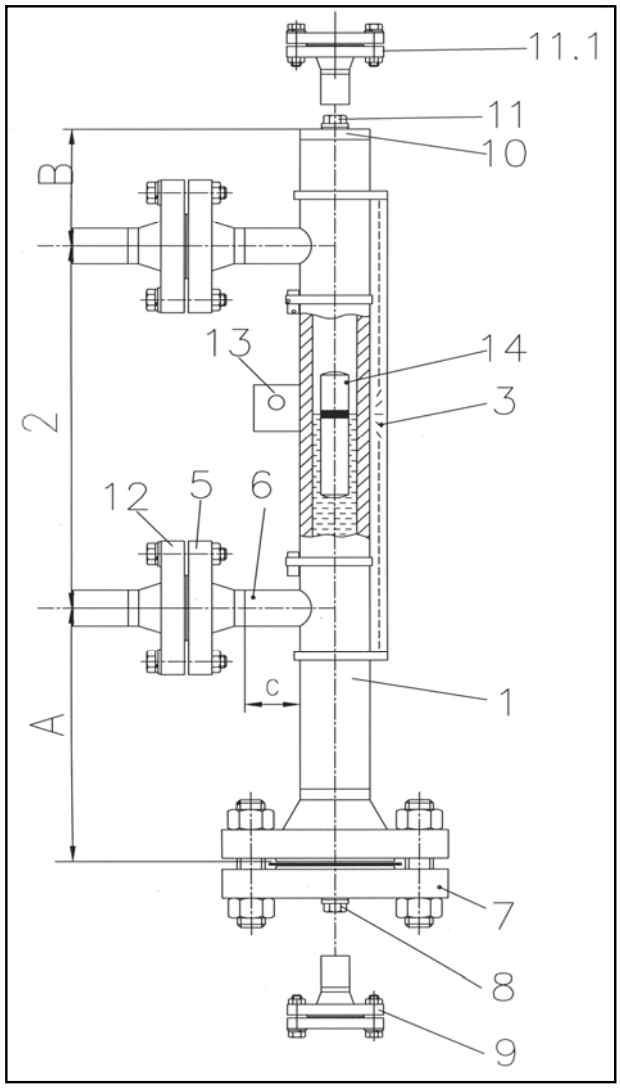

Key:

1 Float pipe welded, dimensions 60,3 x 2 mm
2 c to c distance
3 Design (indication rail)
5 Process connection side/side
6 Side studs welded with T pieces for 100 % X-ray testing
7 Float removal flange
8 Drain plug
9 Additional drain flange, open
10 Float pipe top end finish
11 Vent plug
12 Counter flanges
13 Additional bracket
14 Float pipe seamless
15 Float

Technical specifications magnetic level gauge type ITA-7.0

Principle:	Communicating tubes with magnetic float
Mounting position:	vertical
Measuring range:	**max. 5000 mm (one-part)** > 5000 mm 2- or multipart
Pipe diameter:	**60,3 x 2 mm welded,** **butt-weld connection wie T-pieces**
Process connection:	to specify: **Flanges DN15…50 (1/2"…2" 300#),** **Welding or threaded stud**
Drain/Vent connections:	**Plug 1/2"NPT**
Pipe material:	**1.4404**; 1.4435; 1.4539; Hastelloy C4 (2.4610); Inconel 625 (2.4856); Inconel 825 (2.4858); Titan (3.7035) (other materials on request)
Flange material:	**CS**
Float material:	**Titanium****, Titan/E-CTFE-coated
Operation temperature:	-50..+400 °C
Operation pressure:	max. 64 bar
Operation density:	min. 0,4243 kg/dm³
Viscosity:	max. 5000 mPa s
Bolts & Nuts:	**CS** SS
Gasket	**Spiral wound, 316Ti** **Cam profile, 316Ti**
Indication rail:	Makrolon up to 120 °C Aluminium up to 400 °C 1.4301 up to 400 °C
Float types:	Cylindical, sealed type Length: **-270 mm** -330 mm -530 mm -630 mm
Standard dimensions:	-A = 240 mm* -B = 130 mm - C = 40 mm

Base equipment printed in bold letters!
***for densities < 0,4243 kg/dm³ enlarge the scale A**
****not for use for hydrogen or alcohol-compounds**

3.12.3 Order codes ITA-7 & ITA-7.0

Mag. Level Gauge
ITA-7 & ITA-7.0 PN64/300 lbs

Prices for mag. level gauge type ITA- 7 & ITA-7.0 PN64/300 lbs

Code	Description
ITA-7.0	**1. Float pipe seamless Dimensions 60,3 x 2,9 mm**
	2. c to c distance
L	c to c distance in mm
	3. Design
0	without indication rail each 100 mm
1	Indication rail material: Makrolon max. 120 °C; each 100 mn
2	Indication rail material: Aluminium max. 400 °C, pro 100 mn
3	Indication rail material: 1.4401 max. 400 °C, pro 100 mn
	4. c to c distance < 5000 mm
A	< 5000 mm - without flange connection; DN 50 PN 63
B	> 5000 mm - with flange connection; DN 50 PN 63
	5. Process connection side/side
Y	Welding connection (please specify)
Z	Threaded connection (please specify)
1	Flanges DN 15 PN 63
2	Flanges DN 20 PN 63
3	Flanges DN 25 PN 63
4	Flanges DN 32 PN 63
5	Flanges DN 40 PN 63
6	Flanges DN 50 PN 63
A	Flanges 1/2" ANSI 300 lbs
B	Flanges 3/4" ANSI 300 lbs
C	Flanges 1" ANSI 300 lbs
D	Flanges 1 1/4" ANSI 300 lbs
E	Flanges 1 1/2" ANSI 300 lbs
F	Flanges 2" ANSI 300 lbs
	5.1 Surface side flanges
0	without
A	Standard- Surface Form C
B	Standard-Surface RF
D	Surface Form E Rz=16
E	Surface RFSF (smooth finished)
F	Surface Nut (DIN2512)
G	Surface groove large
H	Surface Feder (DIN2512)
K	Surface tongue-large
L	Surface RTJ (ANSI) 1/2" bis 2"
	6. Side studs welded with T-pieces for 100 % X-ray testing
0	without
T	T-pieces

Mag. Level Gauge
ITA-7 & ITA-7.0 PN64/300 lbs

Prices for mag. level gauge type ITA- 7 & ITA-7.0 PN64/300 lbs

Code	Description
	7. Float removal flange (bottom side)
1	End cap (only if float removal flange (top side)
2	Flange DN 50 PN 63 incl. blind flange
A	Flange 2" ANSI 300 lbs incl. blind flange
3	Flange DN 50 PN 63 prepared for shut off valve on side
B	Flange 2" ANSI 300 lbs prepared for shut off valve on side
	7.1 Surface float removal flange (bottom side) (only DN50 or 2")
0	without (Float removal flange (bottom side) = end cap or < DN50 or 2"
A	Standard- Surface Form C
B	Standard-Surface RF
D	Surface Form E Rz=16
E	Surface RFSF (smooth finished)
F	Surface groove (DIN2512)
G	Surface groove large
H	Surface tongue (DIN2512)
K	Surface tongue-large
L	Surface RTJ (ANSI) 1/2" bis 2"
	7.2 Bolts & Nuts float removal flange
0	without (Float removal flange (bottom side) = end cap
61	M20 x 80 mm; mat. steel zinced; Flange DN 50 PN 63
62	M20 x 80 mm; mat. SS 1.4301; Flange DN 50 PN 63
63	M20 x 110 mm; mat. steel zinced; Flange 2510 DN50 PN63
64	M22 x 100 mm; mat. SS 1.4301; Flange DIN 2510 DN 50 PN 63
6X	5/8" x 89 mm; mat. steel zinced A193B7 / A1942H; Flange 2" ANSI 300 lbs
6Z	5/8" x 89 mm; mat. SS A193B8 A1948M; Flange 2" ANSI 300 lbs
FA	5/8" x 83 mm; RF; mat. A193B7/A1942H zinced steel; flange 2" ANSI 300 lbs, ANSI B16.5
FB	5/8" x 89 mm; RF; mat. A193B8 / A1948M SS; flange 2" ANSI 300 lbs, ANSI B16.5
FC	5/8" x 102 mm; RTJ; mat. A193B7/A1942H zinced steel, flange 2" ANSI 300 lbs; ANSI B16.5
FD	5/8" x 102 mm; RTJ; mat. A193B8 / A1948M SS; flange 2" ANSI 300 lbs, ANSI B16.5
FT	5/8" x 89 mm; RF; mat. A193B8 / A1948M PTFE-coated; flange 2" ANSI 300 lbs, ANSI B16.5
FV	5/8" x 102 mm; RTJ; mat. A193B8/A1948M PTFE-coated, flange 2" ANSI 300 lbs; ANSI B16.5
	8. Drain plug
0	without
1	Drain plug 1/2" NPT
2	Drain plug 3/4" NPT
3	Drain plug 1" NPT
	9. Additional drain flange, open
0	without
1	Drain stud with flange DN 15 PN 63
2	Drain stud with flange DN 20 PN 63
3	Drain stud with flange DN 25 PN 63
4	Drain stud with flange DN 32 PN 63
5	Drain stud with flange DN 40 PN 63
A	Drain stud with flange 1/2" ANSI 300 lbs
B	Drain stud with flange 3/4" ANSI 300 lbs
C	Drain stud with flange 1" ANSI 300 lbs
D	Drain stud with flange 1 1/4" ANSI 300 lbs
E	Drain stud with flange 1 1/2" ANSI 300 lbs

Mag. Level Gauge
ITA-7 & ITA-7.0 PN64/300 lbs

Prices for mag. level gauge type ITA- 7 & ITA-7.0 PN64/300 lbs

Code	Description
	9.1 Drain flange with concentric reducer (X-ray testing)
0	ohne
1	DN 15 PN 63
2	DN 20 PN 63
3	DN 25 PN 63
4	DN 32 PN 63
5	DN 40 PN 63
A	1/2" ANSI 300 lbs
B	3/4" ANSI 300 lbs
C	1" ANSI 300 lbs
D	1 1/4" ANSI 300 lbs
E	1 1/2" ANSI 300 lbs
	9.2 Surface open drain flange
0	without (Float removal flange (bottom side) = end cap or < DN50 or 2"'
A	Standard- Surface Form C
B	Standard-Surface RF
D	Surface Form E Rz=16
E	Surface RFSF (smooth finished)
F	Surface groove (DIN2512)
G	Surface groove large
H	Surface tongue (DIN2512)
K	Surface tongue-large
L	Surface RTJ (ANSI) 1/2" bis 2"
	10. Float pipe top end finish
1	End cap
2	Flange with blind flange DN 50 PN 63
A	Flange with blind flange 2" ANSI 300 lbs
	10.1 Surface float pipe top end finish flange (only DN50 or 2")
0	without (Float pipe top end finish = End cap or < DN50 or 2")
A	Standard- Surface Form C
B	Standard-Surface RF
D	Surface Form E Rz=16
E	Surface RFSF (smooth finished)
F	Surface groove (DIN2512)
G	Surface groove large
H	Surface tongue (DIN2512)
K	Surface tongue-large
L	Surface RTJ (ANSI) 1/2" bis 2"
	10.2 Bolts & nuts float pipe top end finish flange
0	without (Float pipe top end = end cap)
61	M20 x 80 mm; mat. steel zinced; Flange DN 50 PN 63
62	M20 x 80 mm; mat. SS 1.4301; Flange DN 50 PN 63
63	M20 x 110 mm; mat. steel zinced; Flange 2510 DN50 PN63
64	M22 x 100 mm; mat. SS 1.4301; Flange DIN 2510 DN 50 PN 63
6X	5/8" x 89 mm; mat. steel zinced A193B7 / A1942H; Flange 2" ANSI 300 lbs
6Z	5/8" x 89 mm; mat. SS A193B8 A1948M; Flange 2" ANSI 300 lbs

Mag. Level Gauge
ITA-7 & ITA-7.0 PN64/300 lbs

Prices for mag. level gauge type ITA- 7 & ITA-7.0 PN64/300 lbs

Code	Description
	10.2 Bolts & nuts float pipe top end finish flange (Continuation)
FA	5/8" x 83 mm; RF; mat. A193B7/A1942H zinced steel; flange 2" ANSI 300 lbs, ANSI B16.5
FB	5/8" x 89 mm; RF; mat. A193B8 / A1948M SS; flange 2" ANSI 300 lbs, ANSI B16.5
FC	5/8" x 102 mm; RTJ; mat. A193B7/A1942H zinced steel, flange 2" ANSI 300 lbs; ANSI B16.5
FD	5/8" x 102 mm; RTJ; mat. A193B8 / A1948M SS; flange 2" ANSI 300 lbs, ANSI B16.5
FT	5/8" x 89 mm; RF; mat. A193B8 / A1948M PTFE-coated; flange 2" ANSI 300 lbs, ANSI B16.5
FV	5/8" x 102 mm; RTJ; mat. A193B8/A1948M PTFE-coated, flange 2" ANSI 300 lbs; ANSI B16.5
	11. Vent plug at top end
0	without
1	Vent plug G 1/2" DIN910
2	Vent plug 1/2" NPT
3	Vent plug 3/4" NPT
4	Vent plug 1" NPT
	11.1 Vent flange welded to end cap instead of vent plug
0	without
1	Flange DN 15 PN 63 (socket weld construction to endcap)
2	Flange DN 20 PN 63 (socket weld construction to end cap)
3	Flange DN 25 PN 63 (socket weld construction to end cap)
4	Flange DN 32 PN 63 (socket weld construction to end cap)
5	Flange DN 40 PN 63 (socket weld construction to end cap)
A	Flange 1/2" ANSI 300 lbs (socket weld construction to end cap)
B	Flange 3/4" ANSI 300 lbs (socket weld construction to end cap)
C	Flange 1" ANSI 300 lbs (socket weld construction to end cap)
D	Flange 1 1/4" ANSI 300 lbs (socket weld construction to end cap)
E	Flange 1 1/2" ANSI 300 lbs (socket weld construction to end cap)
	11.2 Vent flange with concentric reducer (X-ray testing)
0	without
1	DN 15 PN 63
2	DN 20 PN 63
3	DN 25 PN 63
4	DN 32 PN 63
5	DN 40 PN 63
A	1/2" ANSI 300 lbs
B	3/4" ANSI 300 lbs
C	1" ANSI 300 lbs
D	1 1/4" ANSI 300 lbs
E	1 1/2" ANSI 300 lbs
	11.3 Surface vent flange welded to end cap (only DN50 or 2")
0	without (Vent flange welded to end cap = without)
A	Standard- Surface Form C
B	Standard-Surface RF
D	Surface Form E Rz=16
E	Surface RFSF (smooth finished)
F	Surface groove (DIN2512)
G	Surface groove large
H	Surface tongue (DIN2512)
K	Surface tongue-large
L	Surface RTJ (ANSI) 1/2" bis 2"

Mag. Level Gauge
ITA-7 & ITA-7.0 PN64/300 lbs

Prices for mag. level gauge type ITA- 7 & ITA-7.0 PN64/300 lbs

Code	Description
	12. Counter flanges
0	without
1	DN 15 PN 63
2	DN 20 PN 63
3	DN 25 PN 63
4	DN 32 PN 63
5	DN 40 PN 63
6	DN 50 PN 63
A	1/2" ANSI 300 lbs
B	3/4" ANSI 300 lbs
C	1" ANSI 300 lbs
D	1 1/4" ANSI 300 lbs
E	1 1/2" ANSI 300 lbs
F	2" ANSI 300 lbs
	12.1 Surface counter flanges
0	without (Counter flanges = without)
A	Standard- Surface Form C
B	Standard-Surface RF
D	Surface Form E Rz=16
E	Surface RFSF (smooth finished)
F	Surface groove (DIN2512)
G	Surface groove large
H	Surface tongue (DIN2512)
K	Surface tongue-large
L	Surface RTJ (ANSI) 1/2" bis 2"
	12.2 Bolts & Nuts counter flanges
0	without (Counter flanges = without)
61	M20 x 80 mm; mat. steel zinced; Flange DN 50 PN 63
62	M20 x 80 mm; mat. SS 1.4301; Flange DN 50 PN 63
63	M20 x 110 mm; mat. steel zinced; Flange 2510 DN50 PN63
64	M22 x 100 mm; mat. SS 1.4301; Flange DIN 2510 DN 50 PN 63
6X	5/8" x 89 mm; mat. steel zinced A193B7 / A1942H; Flange 2" ANSI 300 lbs
6Z	5/8" x 89 mm; mat. SS A193B8 A1948M; Flange 2" ANSI 300 lbs
FA	5/8" x 83 mm; RF; mat. A193B7/A1942H zinced steel; flange 2" ANSI 300 lbs, ANSI B16.5
FB	5/8" x 89 mm; RF; mat. A193B8 / A1948M SS; flange 2" ANSI 300 lbs, ANSI B16.5
FC	5/8" x 102 mm; RTJ; mat. A193B7/A1942H zinced steel, flange 2" ANSI 300 lbs; ANSI B16.5
FD	5/8" x 102 mm; RTJ; mat. A193B8 / A1948M SS; flange 2" ANSI 300 lbs, ANSI B16.5
FT	5/8" x 89 mm; RF; mat. A193B8 / A1948M PTFE-coated; flange 2" ANSI 300 lbs, ANSI B16.5
FV	5/8" x 102 mm; RTJ; mat. A193B8/A1948M PTFE-coated, flange 2" ANSI 300 lbs; ANSI B16.5
	13. Additional bracket welded to the float pipe
0	without
H	Bracket

Mag. Level Gauge
ITA-7 & ITA-7.0 PN64/300 lbs

Prices for mag. Level Gauges type: ITA-7 PN64/300 lbs

	Description						
Floats							
Code	**Pressure [bar]**	**Material**	**Diameter [mm]**	**Length [mm]**	**min. Density [kg/dm³]**	**vented [Y/N]**	**Notes**
7T0240K1	64	Titanium	50,8	265	0,6820	N	do not use with alcohol or hydrogen compounc
7T0240K3	64	Titanium	50,8	265	0,5551	N	only with 316SS or Aluminium indication rail; do not use with alcohol or hydrogen compounc
7T0300K1	64	Titanium	50,8	325	0,6064	N	do not use with alcohol or hydrogen compounc
7T0300K3	64	Titanium	50,8	325	0,5168	N	only with 316SS or Aluminium indication rail; do not use with alcohol or hydrogen compounc
7T0500K3	64	Titanium	50,8	525	0,4450	N	only with 316SS or Aluminium indication rail; do not use with alcohol or hydrogen compounc
7T0600K3	64	Titanium	50,8	625	0,4243	N	only with 316SS or Aluminium indication rail; do not use with alcohol or hydrogen compounc

For additional accessories please refer to the chapters "Special equipment" and "Electrical accessories and Switches"

3.12.3 Order code scheme for ITA-7 & ITA-7.0

1. Type of level gauge ITA-7 or ITA-7.0	2. C to C distance in mm [or inches]	3. Design	4. C to C distance > 5000 mm	5. Process connection [side/side]	5.1 Surface side flanges	6. Side studs welded with T-pieces for 100 % X-ray-testing	7. Float removal flange	7.1 Surface float removal flange	7.2 Bolts & nuts float removal flange	8. Drain plug	9. Additional drain flange, open
ITA-7											
ITA-7.0											

9.1 Drain flange with concentric reducer (X-ray testing)	9.2 Surface open drain flange	10. Float pipe top end finish	10.1 Surface top end finish flange	10.2 Bolts and nuts rop end finish flange	11. Vent plug at top end	11.1 Vent flange welded to end cap instead of vent plug	11.2 Vent flange with concentric reducer (X-ray testing)	11.3 Surface vent flange welded to end cap	12. Counter flanges	12.1 Surface counter flanges	12.2 Bolts & nuts counter flanges	13. Additional bracket welded to the float pipe	14. Float

3.13.1 ITA-8.1 [PVC]

Characteristics: PN6 / Material: PVC

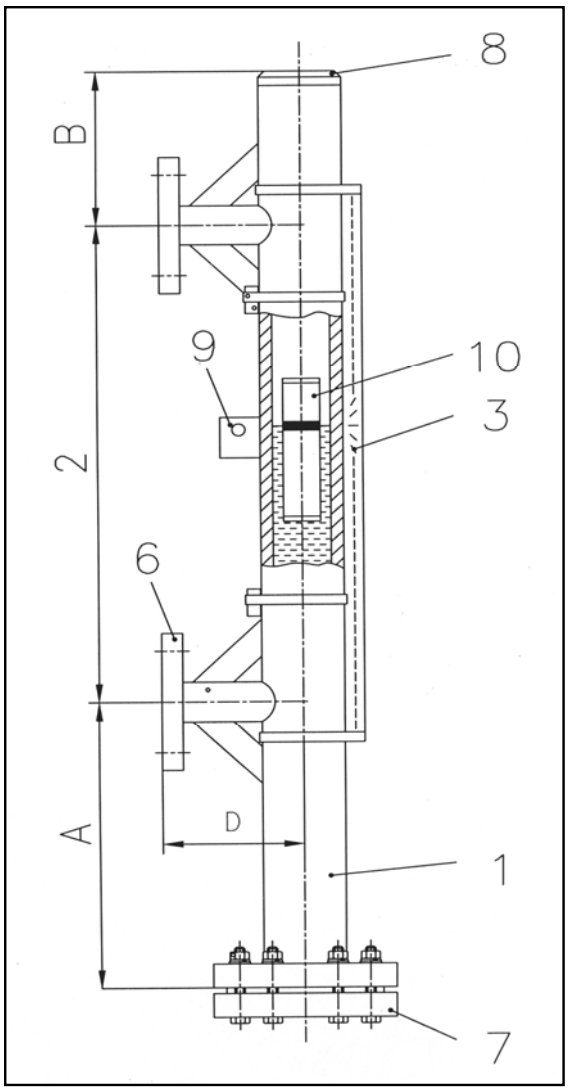

Key:

1 Float pipe PVC, dimensions 63 x 47 mm
2 c to c distance
3 Design (indication rail)
6 Process connection side/side
7 Drain plug
8 Float pipe top end finish
9 Mounting link
10 Float

Technical specifications magnetic level gauge type ITA-8.1

Principle:	Communicating tubes with magnetic float
Mounting position:	vertical
Measuring range:	**max. 5000 mm (one-part)** > 5000 mm 2- or multipart
Pipe diameter:	**63 x 4,7 mm**
Process connection:	to specify: **Flanges DN15…50 (1/2"…2")**
Drain/Vent connections:	**Plug R1/2"** (for more please see order codes)
Pipe material:	**PVC**
Flange material:	same as pipe material
Float material:	**PVC**
Operation temperature:	-30..+60 °C
Operation pressure:	max. 6 bar
Operation density:	min. 0,75 kg/dm³
Viscosity:	max. 5000 mPa s
Bolts & Nuts:	**SS**
Gasket	**Viton**
Indication rail:	**Aluminium** 1.4301
Float types:	Cylindical, sealed type Length: **- 255 mm** - 135 mm
Standard dimensions:	A = 240 mm* B = 130 mm C = 110 mm

Base equipment printed in bold letters!
***for densities < 0,75 kg/dm³ enlarge scale A**

3.13.2 Order codes ITA-8.1 (PVC)

Mag. Level Gauge
ITA-8.1 PN6 (PVC)
Float pipe and flange material PVC

Order codes for mag. level gauge type ITA-8.1 PN6 (PVC)

Code	Description
ITA-8.1	**1. Float pipe PVC** **Dimensions 63 x 4,7 mm**
	2. C to C distance
L	C to C distance in mm
	3. Design
0	without indication rail, each 100 mm
1	Indication rail material Aluminium, max. 60 °C liquid temperature, each 100 mm
2	Indication rail material 1.4401, max. 60 °C liquid temperature, each 100 mm
	4. C to C distance < 5000 mm
A	< 5000 without flange connection DN 32 PN 6
B	> 5000 with flange connection DN32 PN 6
	5. Reinforcement
0	without reinforcement
A	Reinforcement of the PVC-guide tube, material: 1.4404, base price + length dependent price each 100 mm guide tube
	6. Process connections side/side
Y	Welding connection (please specify)
Z	Threaded connection (please specify)
1	Flanges DN 15 PN 6
2	Flanges DN 15 PN 10
3	Flanges DN 20 PN 6
4	Flanges DN 20 PN 10
5	Flanges DN 25 PN 6
6	Flanges DN 25 PN 10
7	Flanges DN 32 PN 6
8	Flanges DN 32 PN 10
9	Flanges DN 40 PN 6
A	Flanges DN 40 PN 10
B	Flanges DN 50 PN 6
C	Flanges DN 50 PN 10
D	Flanges 1/2" ANSI 150 lbs
E	Flanges 3/4" ANSI 150 lbs
F	Flanges 1" ANSI 150 lbs
G	Flanges 1 1/4" ANSI 150 lbs
H	Flanges 1 1/2" ANSI 150 lbs
K	Flanges 2" ANSI 150 lbs
	7. Drain plug
0	without
1	Drain plug R1/2"
2	Drain plug 1/2" NPT
3	Drain plug 3/4" NPT
4	Stud on blind flange

Mag. Level Gauge
ITA-8.1 PN6 (PVC)
Float pipe and flange material PVC

Order codes for mag. level gauge type ITA-8.1 PN6 (PVC)

Code	Description
	8. Float pipe top end finish
0	without
A	End cap
B	Vent plug R1/2"
C	Vent plug 1/2" NPT
D	Vent plug 3/4" NPT
E	Flange DN32 PN6
	8.1 Nuts & bolts top end finish flange
0	without
1	M8 x 60 mm; mat. SS 1.4301; DIN 931
	9. Mounting link for additional fixing on the tan
0	without
H	Mounting link for additional fixing on the tank

Floats

Code	Pressure [bar]	Material	Diameter [mm]	Length [mm]	min. Density [kg/dm³]	vented [Y/N]	Notes
8PVC01K1	10	PVC	50	135	1,1500	N	only with 316SS or Aluminium indication ra
8PVC02K1	10	PVC	50	255	0,7500	N	only with 316SS or Aluminium indication rail

For additional accessories please refer to the chapters "Special equipment" and "Electrical accessories and Switches"

3.13.2 Order scheme for ITA-8.1

1. Type of level gauge [ITA-8.1]	2. C to C distance in mm [or inches]	3. Design [Indication rail]	4. C to C distance > 5000 mm	5. Reinforcement	6. Process connection [side/side]	7. Drain plug	8. Float pipe top end finish	8.1 Bolts & nuts top end finish	9. Mounting link for add. Fixing on the tank	10. Float
ITA-8.1										

3.14.1 ITA-8.2 [PP]

Characteristics: PN6 / Material: PP

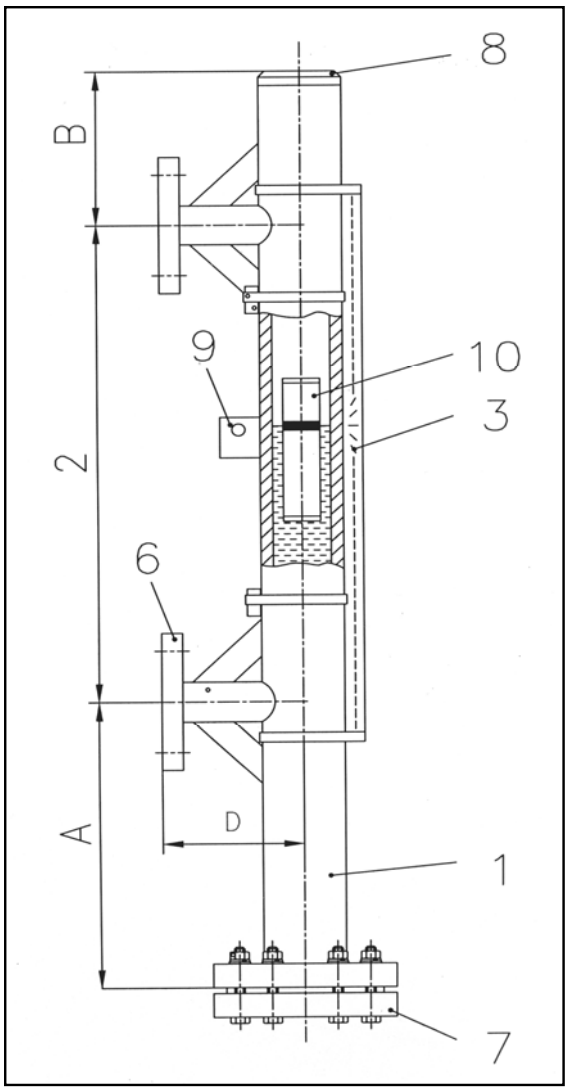

Key:

1 Float pipe PP, dimensions 63 x 47 mm
2 c to c distance
3 Design (indication rail)
6 Process connection side/side
7 Drain plug
8 Float pipe top end finish
9 Mounting link
10 Float

Technical specifications magnetic level gauge type ITA-8.2

Principle:	Communicating tubes with magnetic float
Mounting position:	vertical
Measuring range:	**max. 5000 mm (one-part)** > 5000 mm 2- or multipart
Pipe diameter:	**63 x 4,7 mm**
Process connection:	to specify: **Flanges DN15…50 (1/2"…2")**
Drain/Vent connections:	**Plug R1/2"** (for more please see order codes)
Pipe material:	**PP**
Flange material:	same as pipe material
Float material:	**PP**
Operation temperature:	-30..+80 °C
Operation pressure:	max. 6 bar
Operation density:	min. 0,65 kg/dm³
Viscosity:	max. 5000 mPa s
Bolts & Nuts:	**SS**
Gasket	**Viton**
Indication rail:	**Aluminium** 1.4301
Float types:	Cylindical, sealed type Length: **- 255 mm** - 135 mm
Standard dimensions:	A = 240 mm* B = 130 mm C = 110 mm

Base equipment printed in bold letters!
***for densities < 0,65 kg/dm³ enlarge scale A**

3.14.2 Order codes ITA-8.2 (PP)

Mag. Level Gauge
ITA-8.2 PN6 (PP)
Float pipe and flange material PP

Order codes for mag. level gauge type ITA-8.2 PN6 (PP)

Code	Description
ITA-8.1	**1. Float pipe PP** **Dimensions 63 x 4,7 mm**
	2. C to C distance
L	C to C distance in mm
	3. Design
0	without indication rail, each 100 mm
1	Indication rail material Aluminium, max. 80 °C liquid temperature, each 100 mm
2	Indication rail material 1.4401, max. 80 °C liquid temperature, each 100 mm
	4. C to C distance < 5000 mm
A	< 5000 without flange connection DN 32 PN 6
B	> 5000 with flange connection DN32 PN 6
	5. Reinforcement
0	without reinforcement
A	Reinforcement of the PP-guide tube, material: 1.4404, base price + length dependent price each 100 mm guide tube
	6. Process connections side/side
Y	Welding connection (please specify)
Z	Threaded connection (please specify)
1	Flanges DN 15 PN 6
2	Flanges DN 15 PN 10
3	Flanges DN 20 PN 6
4	Flanges DN 20 PN 10
5	Flanges DN 25 PN 6
6	Flanges DN 25 PN 10
7	Flanges DN 32 PN 6
8	Flanges DN 32 PN 10
9	Flanges DN 40 PN 6
A	Flanges DN 40 PN 10
B	Flanges DN 50 PN 6
C	Flanges DN 50 PN 10
D	Flanges 1/2" ANSI 150 lbs
E	Flanges 3/4" ANSI 150 lbs
F	Flanges 1" ANSI 150 lbs
G	Flanges 1 1/4" ANSI 150 lbs
H	Flanges 1 1/2" ANSI 150 lbs
K	Flanges 2" ANSI 150 lbs
	7. Drain plug
0	without
1	Drain plug R1/2"
2	Drain plug 1/2" NPT
3	Drain plug 3/4" NPT

Mag. Level Gauge
ITA-8.2 PN6 (PP)
Float pipe and flanges material: PP

Order codes for mag. Level Gauges type: ITA-8.2 PN6 (PP)

	Description
	8. Float pipe top end finish
A	End cap
B	Vent plug R1/2"
C	Vent plug 1/2" NPT
D	Vent plug 3/4" NPT
E	Flange DN32 PN6
	8.1 Nuts & bolts top end finish flange
0	without
1	M8 x 60 mm; mat. SS 1.4301; DIN 931
	9. Mounting link for additional fixing on the tan
0	without
1	Mounting link for additional fixing on the tank

9. Floats

Code	Pressure [bar]	Material	Diameter [mm]	Length [mm]	min. Density [kg/dm³]	vented [Y/N]	Notes
8PP001K1	10	PP	50	135	0,9500	N	only with 316SS or Aluminium indication ra
8PP002K1	10	PP	50	255	0,6500	N	only with 316SS or Aluminium indication rail

For additional accessories please refer to the chapters "Special equipment" and "Electrical accessories and Switches"

3.14.2 Order scheme for ITA-8.2

1. Type of level gauge [ITA-8.2]	2. C to C distance in mm [or inches]	3. Design [Indication rail]	4. C to C distance > 5000 mm	5. Reinforcement	6. Process connection [side/side]	7. Drain plug	8. Float pipe top end finish	8.1 Bolts & nuts top end finish	9. Mounting link for add. Fixing on the tank	10. Float
ITA-8.2										

3.15.1 ITA-8.3 [PVDF]

Characteristics: PN6 / Material: PVDF

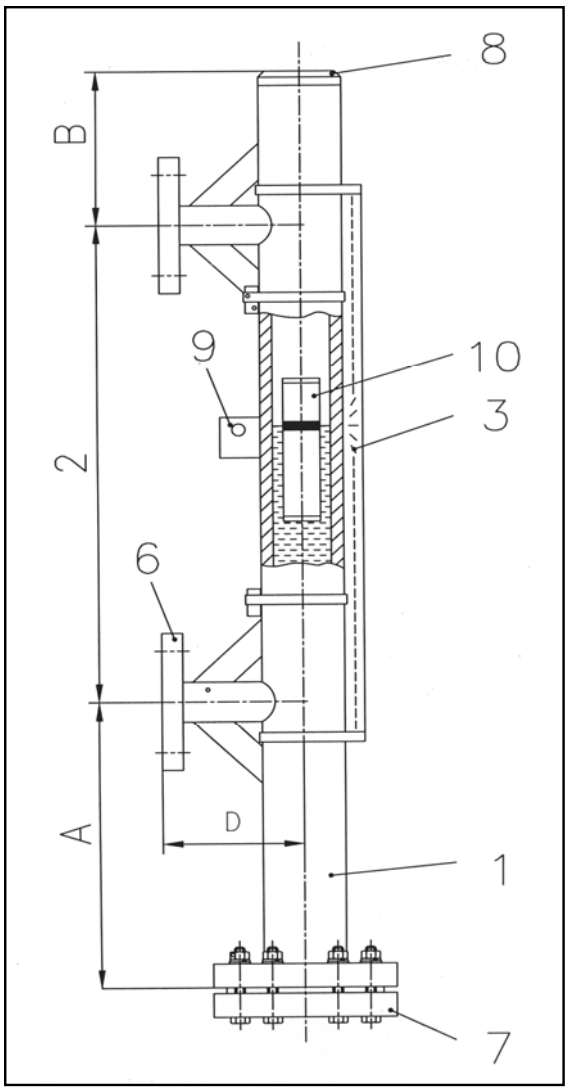

Key:

1 Float pipe PVDF, dimensions 63 x 47 mm
2 c to c distance
3 Design (indication rail)
6 Process connection side/side
7 Drain plug
8 Float pipe top end finish
9 Mounting link
10 Float

Technical specifications magnetic level gauge type ITA-8.3

Principle:	Communicating tubes with magnetic float
Mounting position:	vertical
Measuring range:	**max. 5000 mm (one-part)** > 5000 mm 2- or multipart
Pipe diameter:	**63 x 4,7 mm**
Process connection:	to specify: **Flanges DN15…50 (1/2"…2")**
Drain/Vent connections:	**Plug R1/2"** (for more please see order codes)
Pipe material:	**PVDF**
Flange material:	same as pipe material
Float material:	**PVDF**
Operation temperature:	-40..+120 °C
Operation pressure:	max. 6 bar
Operation density:	min. 0,85 kg/dm³
Viscosity:	max. 5000 mPa s
Bolts & Nuts:	**SS**
Gasket	**Viton**
Indication rail:	**Aluminium** 1.4301
Float types:	Cylindical, sealed type Length: **- 255 mm** - 135 mm
Standard dimensions:	A = 240 mm* B = 130 mm C = 110 mm

Base equipment printed in bold letters!
***for densities < 0,85 kg/dm³ enlarge scale A**

3.15.2 Order codes ITA-8.3 (PVDF)

Mag. Level Gauge
ITA-8.3 PN6 (PVDF)
Float pipe and flange material PVDF

Order codes for mag. level gauge type ITA-8.3 PN6 (PVDF)

Code	Description
ITA-8.3	**1. Float pipe PVDF** **Dimensions 63 x 2 mm**
	2. C to C distance
L	C to C distance in mm
	3. Design
0	without indication rail, each 100 mm
1	Indication rail material Aluminium, max. 120 °C liquid temperature, each 100 mm
2	Indication rail material 1.4401, max. 120 °C liquid temperature, each 100 mm
	4. C to C distance < 5000 mm
A	< 5000 without flange connection DN 32 PN 6
B	> 5000 with flange connection DN32 PN 6
	5. Reinforcement
0	without reinforcement
A	Reinforcement of the PVDF-guide tube, material: 1.4404, base price + length dependent price each 100 mm guide tube
	6. Process connections side/side
Y	Welding connection (please specify)
Z	Threaded connection (please specify)
1	Flanges DN 15 PN 6
2	Flanges DN 15 PN 10
3	Flanges DN 20 PN 6
4	Flanges DN 20 PN 10
5	Flanges DN 25 PN 6
6	Flanges DN 25 PN 10
7	Flanges DN 32 PN 6
8	Flanges DN 32 PN 10
9	Flanges DN 40 PN 6
A	Flanges DN 40 PN 10
B	Flanges DN 50 PN 6
C	Flanges DN 50 PN 10
D	Flanges 1/2" ANSI 150 lbs
E	Flanges 3/4" ANSI 150 lbs
F	Flanges 1" ANSI 150 lbs
G	Flanges 1 1/4" ANSI 150 lbs
H	Flanges 1 1/2" ANSI 150 lbs
K	Flanges 2" ANSI 150 lbs
	7. Drain plug
0	without
1	Drain plug R1/2"
2	Drain plug 1/2" NPT
3	Drain plug 3/4" NPT

Mag. Level Gauge
ITA-8.3 PN6 (PVDF)
Float pipe and flanges material: PVDF

Order codes for mag. Level Gauges type: ITA-8.3 PN6 (PVDF)

	Description
	8. Float pipe top end finish
A	End cap
B	Vent plug R1/2'
C	Vent plug 1/2" NPT
D	Vent plug 3/4" NPT
E	Flange DN32 PN6
	8.1 Nuts & bolts top end finish flange
0	without
1	M8 x 60 mm; mat. SS 1.4301; DIN 931
	9. Mounting link for additional fixing on the tan
0	without
1	Mounting link for additional fixing on the tan

Floats

Code	Pressure [bar]	Material	Diameter [mm]	Length [mm]	min. Density [kg/dm³]	vented [Y/N]	Notes
8PVDF1K1	10	PVDF	50	135	1,3000	N	only with 316SS or Aluminium indication ra
8PVDF2K1	10	PVDF	50	255	0,8500	N	only with 316SS or Aluminium indication rail

For additional accessories please refer to the chapters "Special equipment" and "Electrical accessories and Switches"

3.15.2 Order scheme for ITA-8.3

1. Type of level gauge [ITA-8.3]	2. C to C distance in mm [or inches]	3. Design [Indication rail]	4. C to C distance > 5000 mm	5. Reinforcement	6. Process connection [side/side]	7. Drain plug	8. Float pipe top end finish	8.1 Bolts & nuts top end finish	9. Mounting link for add. Fixing on the tank	10. Float
ITA-8.3										

3.16.1 ITA-9.1 [PVC]

Characteristics: PN6 / Material: PVC
(mounted from top of tank)

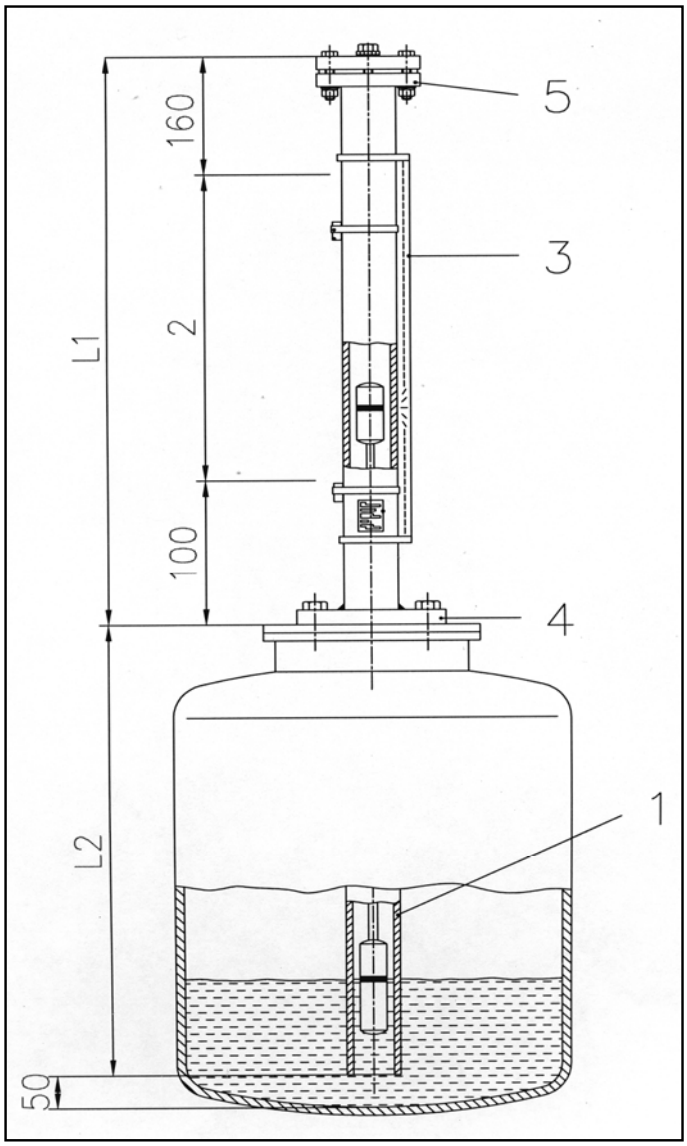

Key:

1 Float pipe PVC, dimensions 63 x 4,7 mm
2 Measuring length
3 Design (indication rail)
4 Process connection on tank
5 Follower magnet guide tube topside finish

Technical specifications magnetic level gauge type ITA-9.1

Principle:	Communicating tubes with magnetic float
Mounting position:	top of tank
Measuring range:	**max. 2500 mm**
Pipe diameter:	**63 x 4,7 mm**
Process connection:	Flanged DN 80 (3") Flanged DN100…DN150 (4"…6")
Drain/Vent connections:	**Flanged DN32 PN6**
Pipe material:	**PVC**
Flange material:	same as pipe material
Float material:	**PVC**
Operation temperature:	-30..+50 °C
Operation pressure:	max. 6 bar
Operation density:	min. 0,7 kg/dm³ (depending on the measuring length)
Viscosity:	max. 5000 mPa s
Bolts & Nuts:	**SS**
Gasket	**Viton**
Indication rail:	**Aluminium** 1.4301
Float types:	Cylindical, sealed type, with rod Length: **- 250 mm** - (special sizes available)

Base equipment printed in bold letters!

3.16.2 Order codes ITA-9.1 (PVC)

Mag. Level Gauge
ITA-9.1 PN 6 PVC
PN6 / PVC / mounted on top of tank

Order codes for mag. level gauge type ITA-9.1 PN 6 (PVC, bis 60 °C)

Code	Description
ITA-9.1	**1. Float pipe** **Dimensions 63 x 4,7 mm**
	2. Measuring length
L	Measuring length in mm (max. 2500 mm, depending on the liquid's density)
	3. Design
0	without indication rail, each 100 mm
1	Indication rail material Aluminium, max. 60 °C liquid temperature, each 100 mm
2	Indication rail material 1.4401, max. 60 °C liquid temperature, each 100 mm
	4. Process connection onto Tank (FF)
1	Flange DN 80/PN 6
2	Flange DN 100/PN 6
3	Flange DN 150/PN 6
A	Flange 3" ANSI/150 lbs
B	Flange 4" ANSI/150 lbs
C	Flange 6" ANSI/150 lbs
	5. Follower magnet guide tube topside finish
1	Vent plug R1/2"
2	Vent plug 1/2"NPT
3	Vent plug 3/4" NPT
4	Flange with blind flange DN32 PN 6

Floats

Code	Pressure [bar]	Material	Diameter [mm]	Length [mm]	min. Density [kg/dm³]	vented [Y/N]	Notes
9PVC03K1	6	PVC	50	135		N	only with 316SS or Aluminium indication rail

NOTE: The prices for the single parts in the above price list are only meant for the composition of a complete level gauge.
For spare parts prices, please refer to the chapter "Spare parts".
For additional accessories please refer to the chapters "Special equipment" and "Electrical accessories and Switches"

3.16.2 Order scheme for ITA-9.1

1. Type of level gauge [ITA-9.1]	2. Measuring length in mm [or inches]	3. Design [Indication rail]	4. Process connection on the tank [FF]	5. Follower magnet guide tube topside finish	6. Float
ITA-9.1					

3.17.1 ITA-9.2 [PP]

Characteristics: PN6 / Material: PP
(mounted from top of tank)

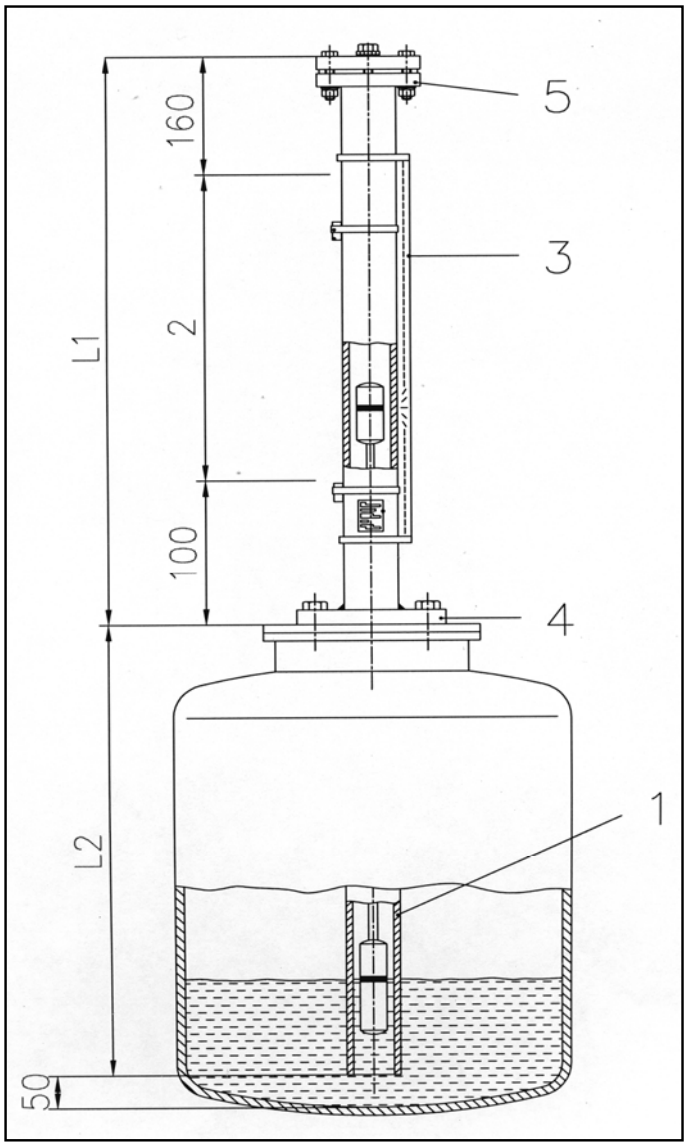

Key:

1 Float pipe PP, dimensions 63 x 3,6 mm
2 Measuring length
3 Design (indication rail)
4 Process connection on tank
5 Follower magnet guide tube topside finish

Technical specifications magnetic level gauge type ITA-9.2

Principle:	Communicating tubes with magnetic float
Mounting position:	top of tank
Measuring range:	**max. 2500 mm**
Pipe diameter:	**63 x 3,6 mm**
Process connection:	Flanged DN 80 (3") Flanged DN100…DN150 (4"…6")
Drain/Vent connections:	**Flanged DN32 PN6**
Pipe material:	**PP**
Flange material:	same as pipe material
Float material:	**PP**
Operation temperature:	-10..+80 °C
Operation pressure:	max. 6 bar
Operation density:	min. 0,7 kg/dm³ (depending on the measuring length)
Viscosity:	max. 5000 mPa s
Bolts & Nuts:	**SS**
Gasket	**Viton**
Indication rail:	**Aluminium** 1.4301
Float types:	Cylindical, sealed type, with rod Length: **- 250 mm** - (special sizes available)

Base equipment printed in bold letters!

3.17.2 Order codes ITA-9.2 (PP)

Mag. Level Gauge
ITA-9.2 PN 6 PP

PN6 / PP / mounted on top of tank

Order codes for mag. level gauges type ITA-9.2 PN 6 (PP, up to 80 °C)

Code	Description
ITA-9.2	**1. Float pipe** **Dimensions 63 x 3,6 mm**
	2. Measuring length
L	Measuring length in mm (max. 2500 mm, depending on the liquid's density)
	3. Design
0	without indication rail, each 100 mm
1	Indication rail material Aluminium, max. 80 °C liquid temperature, each 100 mm
2	Indication rail material 1.4401, max. 80 °C liquid temperature, each 100 mm
	4. Process connection onto Tank (FF)
1	Flange DN 80/PN 6
2	Flange DN 100/PN 6
3	Flange DN 150/PN 6
A	Flange 3" ANSI/150 lbs
B	Flange 4" ANSI/150 lbs
C	Flange 6" ANSI/150 lbs
	5. Follower magnet guide tube topside finish
1	Vent plug R1/2"
2	Vent plug 1/2"NPT
3	Vent plug 3/4" NPT
4	Flange with blind flange DN32 PN 6

Floats

Code	Pressure [bar]	Material	Diameter [mm]	Length [mm]	min. Density [kg/dm³]	vented [Y/N]	Notes
9PP030K1	6	PP	50			N	only with 316SS or Aluminium indication rail

NOTE: The prices for the single parts in the above price list are only meant for the composition of a complete level gauge.
For spare parts prices, please refer to the chapter "Spare parts".
For additional accessories please refer to the chapters "Special equipment" and "Electrical accessories and Switches"

3.17.2 Order scheme for ITA-9.2

1. Type of level gauge [ITA-9.2]	2. Measuring length in mm [or inches]	3. Design [Indication rail]	4. Process connection on the tank [FF]	5. Follower magnet guide tube topside finish	6. Float
ITA-9.2					

3.18.1 ITA-9.3 [PVDF]

Characteristics: PN6 / Material: PVDF
(mounted from top of tank)

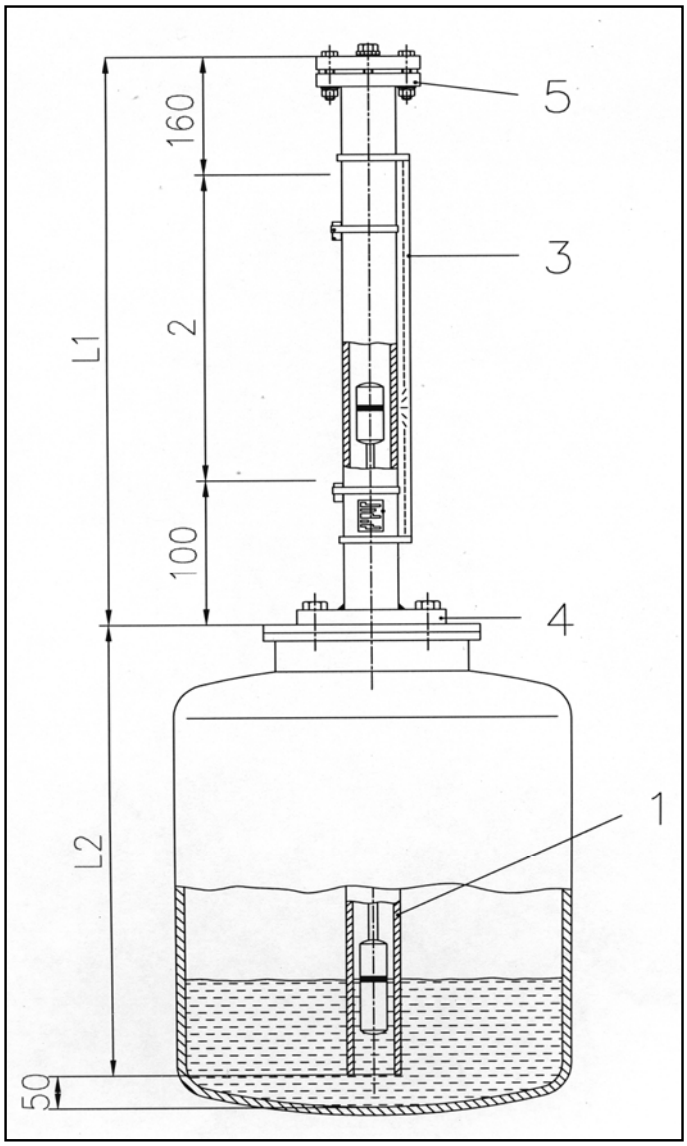

Key:

1 Float pipe PVDF, dimensions 63 x 3 mm
2 Measuring length
3 Design (indication rail)
4 Process connection on tank
5 Follower magnet guide tube topside finish

Technical specifications magnetic level gauge type ITA-9.3

Principle:	Communicating tubes with magnetic float
Mounting position:	top of tank
Measuring range:	**max. 2500 mm**
Pipe diameter:	**63 x 3 mm**
Process connection:	Flanged DN 80 (3") Flanged DN100…DN150 (4"…6")
Drain/Vent connections:	**Flanged DN32 PN6**
Pipe material:	**PVDF**
Flange material:	same as pipe material
Float material:	**PVDF**
Operation temperature:	-40..+120 °C
Operation pressure:	max. 6 bar
Operation density:	min. 0,7 kg/dm³ (depending on the measuring length)
Viscosity:	max. 5000 mPa s
Bolts & Nuts:	**SS**
Gasket	**Viton**
Indication rail:	**Aluminium** 1.4301
Float types:	Cylindical, sealed type, with rod Length: **- 250 mm** - (special sizes available)

Base equipment printed in bold letters!

3.18.2 Order codes ITA-9.3 (PVDF)

Mag. Level Gauge
ITA-9.3 PN 6 PVDF
PN6 / PP / mounted on top of tank

Order codes for mag. level gauge type ITA-9.3 PN 6 (PVDF, up to 120 °C)

Code	Description
ITA-9.3	**1. Float Pipe** **Dimensions 63 x 3 mm**
	2. Measuring length
L	Measuring length in mm (max. 2500 mm, depending on the liquid's density)
	3. Design
0	without indication rail, each 100 mm
1	Indication rail material Aluminium, max. 120 °C liquid temperature, each 100 mm
2	Indication rail material 1.4401, max. 120 °C liquid temperature, each 100 mm
	4. Process connection onto tank (FF)
1	Flange DN 80/PN 6
2	Flange DN 100/PN 6
3	Flange DN 150/PN 6
A	Flange 3" ANSI/150 lbs
B	Flange 4" ANSI/150 lbs
C	Flange 6" ANSI/150 lbs
	5. Follower magnet guide tube topside finish
1	Vent plug R1/2"
2	Vent plug 1/2"NPT
3	Vent plug 3/4" NPT
4	Flange with blind flange DN32 PN 6

Floats

Code	Pressure [bar]	Material	Diameter [mm]	Length [mm]	min. Density [kg/dm³]	vented [Y/N]	Notes
9PVD03	6	PVDF	50			N	only with 316SS or Aluminium indication rail

NOTE: The prices for the single parts in the above price list are only meant for the composition of a complete level gauge.
For spare parts prices, please refer to the chapter "Spare parts".
For additional accessories please refer to the chapters "Special equipment" and "Electrical accessories and Switches"

3.18.2 Order scheme for ITA-9.3

1. Type of level gauge [ITA-9.3]	2. Measuring length in mm [or inches]	3. Design [Indication rail]	4. Process connection on the tank [FF]	5. Follower magnet guide tube topside finish	6. Float
ITA-9.3					

3.19.1 ITA-10

Characteristics: PN100 / Float pipe and flange material: 1.4404

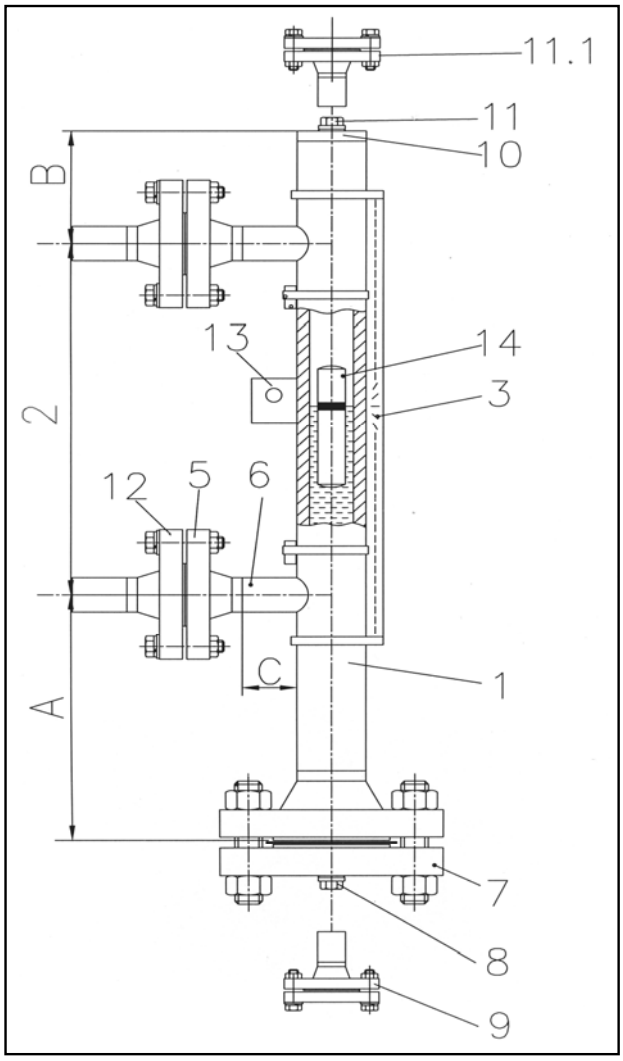

Key:

1 Float pipe welded, dimensions 60,3 x 3,2 mm
2 c to c distance
3 Design (indication rail)
5 Process connection side/side
6 Side studs welded with T pieces for 100 % X-ray testing
7 Float removal flange
8 Drain plug
9 Additional drain flange, open
10 Float pipe top end finish
11 Vent plug
12 Counter flanges
13 Additional bracket
14 Float pipe seamless
15 Float

Technical specifications magnetic level gauge type ITA-10

Principle:	Communicating tubes with magnetic float
Mounting position:	vertical
Measuring range:	**max. 5000 mm (one-part)** > 5000 mm 2- or multipart
Pipe diameter:	**60,3 x 3,2 mm seamless,** **butt-weld connection wie T-pieces**
Process connection:	to specify: **Flanges DN15…50 (1/2"…2" 600#),** **Welding or threaded stud**
Drain/Vent connections:	**Plug 1/2"NPT**
Pipe material:	**1.4404**; 1.4435; 1.4539; Hastelloy C4 (2.4610); Inconel 625 (2.4856); Inconel 825 (2.4858); Titan (3.7035) (other materials on request)
Flange material:	same as pipe material
Float material:	**Titanium*****, Titan/E-CTFE-coated
Operation temperature:	-50..+400 °C
Operation pressure:	max. 100 bar
Operation density:	min. 0,4632 kg/dm³
Viscosity:	max. 5000 mPa s
Bolts & Nuts:	**CS** SS
Gasket	**Spiral wound, 316Ti** **Cam profile, 316Ti**
Indication rail:	Makrolon up to 120 °C Aluminium up to 400 °C 1.4301 up to 400 °C
Float types:	Cylindical, sealed type Length: **-270 mm** -330 mm -430 mm -530 mm -630 mm
Standard dimensions:	-A = 240 mm* -B = 130 mm** - C = 70 mm

Base equipment printed in bold letters!
***for densities < 0,4243 kg/dm³ enlarge the scale A**
**** for end cap B=170 mm for WN**
*****not for use for hydrogen or alcohol-compounds**

3.19.2 ITA-10.0

Characteristics: PN100 / Float pipe: 1.4404 and flanges : CS

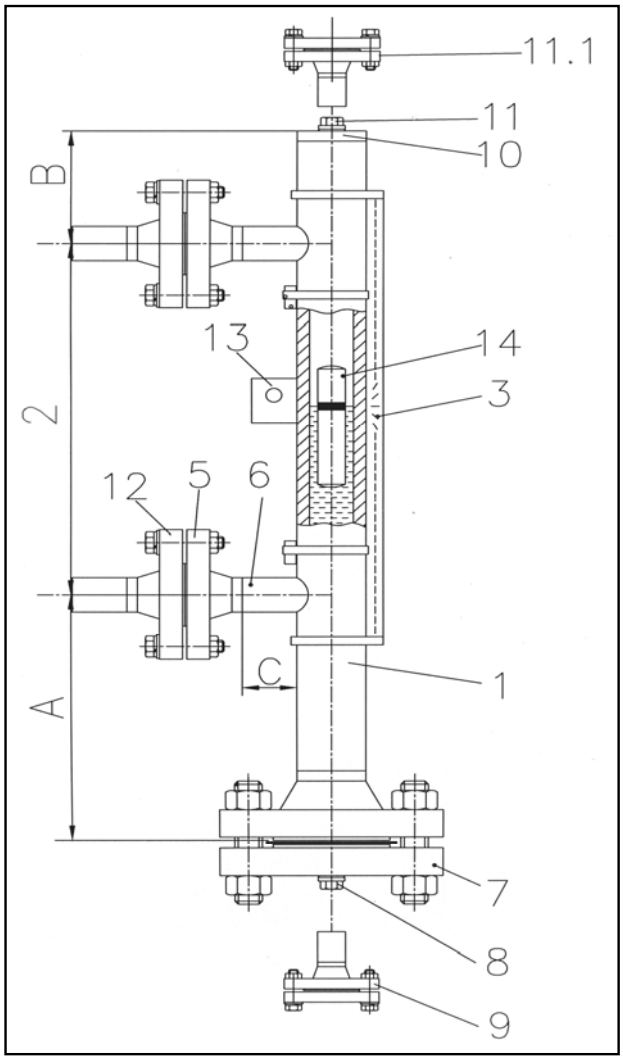

Key:

1 Float pipe welded, dimensions 60,3 x 3,2 mm
2 c to c distance
3 Design (indication rail)
5 Process connection side/side
6 Side studs welded with T pieces for 100 % X-ray testing
7 Float removal flange
8 Drain plug
9 Additional drain flange, open
10 Float pipe top end finish
11 Vent plug
12 Counter flanges
13 Additional bracket
14 Float pipe seamless
15 Float

Technical specifications magnetic level gauge type ITA-10.0

Principle:	Communicating tubes with magnetic float
Mounting position:	vertical
Measuring range:	**max. 5000 mm (one-part)** > 5000 mm 2- or multipart
Pipe diameter:	**60,3 x 3,2 mm seamless,** **butt-weld connection wie T-pieces**
Process connection:	to specify: **Flanges DN15…50 (1/2"…2" 600#),** **Welding or threaded stud**
Drain/Vent connections:	**Plug 1/2"NPT**
Pipe material:	**1.4404**; 1.4435; 1.4539; Hastelloy C4 (2.4610); Inconel 625 (2.4856); Inconel 825 (2.4858); Titan (3.7035) (other materials on request)
Flange material:	**CS**
Float material:	**Titanium*****, Titan/E-CTFE-coated
Operation temperature:	-50..+400 °C
Operation pressure:	max. 100 bar
Operation density:	min. 0,4632 kg/dm³
Viscosity:	max. 5000 mPa s
Bolts & Nuts:	**CS** SS
Gasket	**Spiral wound, 316Ti** **Cam profile, 316Ti**
Indication rail:	Makrolon up to 120 °C Aluminium up to 400 °C 1.4301 up to 400 °C
Float types:	Cylindical, sealed type Length: **-270 mm** -330 mm -430 mm -530 mm -630 mm
Standard dimensions:	-A = 240 mm* -B = 130 mm** - C = 70 mm

Base equipment printed in bold letters!
***for densities < 0,4243 kg/dm³ enlarge the scale A**
**** for end cap B=170 mm for WN**
*****not for use for hydrogen or alcohol-compounds**

3.19.3 Order codes ITA-10 & ITA-10.0

Mag. Level Gauge
ITA-10 & ITA-10.0 PN100/600 lbs

Order codes for mag. level gauge type ITA-10 & ITA-10.0 PN100/600 lbs

Code	Description
ITA-10	**1. Float pipe seamless Dimensions 60,3 x 3,2 mm**
	2. C to C distance
L	C to C distance in mm
	3. Design
0	without indication rail each 100 mm
1	Indication rail material: Makrolon max. 120 °C; each 100 mm
2	Indication rail material: Aluminium max. 400 °C, pro 100 mm
3	Indication rail material: 1.4401 max. 400 °C, pro 100 mm
	4. C to C distance < 5000 mm
A	< 5000 mm - without flange connection; DN 50 PN 100
B	> 5000 mm - with flange connection; DN 50 PN 100
	5. Process connections side/side
Y	Welded connection (please specify)
Z	Threaded connection (please specify)
1	Flanges DN 15 PN 100
2	Flanges DN 25 PN 100
3	Flanges DN 32 PN 100
4	Flanges DN 40 PN 100
5	Flanges DN 50 PN 100
A	Flanges 1/2" ANSI 600 lbs
B	Flanges 3/4" ANSI 600 lbs
C	Flanges 1" ANSI 600 lbs
D	Flanges 1 1/4" ANSI 600 lbs
E	Flanges 1 1/2" ANSI 600 lbs
F	Flanges 2" ANSI 600 lbs
	5.1 Surface side flanges
0	without
B	Standard-Surface RF
D	Surface Form E Rz=16
E	Surface RFSF (smooth finished)
F	Surface groove (DIN2512)
G	Surface groove large
H	Surface tongue (DIN2512)
K	Surface tongue-large
L	Surface RTJ (ANSI)
	6. Side studs welded with T-pieces for 100 % X-ray testing
0	without
1	T-pieces

Mag. Level Gauge
ITA-10 & ITA-10.0 PN100/600 lbs

Order codes for mag. level gauge type ITA-10 & ITA-10.0 PN100/600 lbs

Code	Description
	7. Float removal flange (bottom side)
1	Flange DN 50 PN 100 incl. blind flange
2	Flange 2" ANSI 600 lbs incl. blind flange
3	Flange DN 50 PN 100 prepared for shut off valve on side
4	Flange 2" ANSI 600 lbs prepared for shut off valve on side
	7.1 Surface float removal flange (bottom side) (only DN50 or 2")
B	Standard-Surface RF
D	Surface Form E Rz=16
E	Surface RFSF (smooth finished)
F	Surface groove (DIN2512)
G	Surface groove large
H	Surface tongue (DIN2512)
K	Surface tongue-large
L	Surface RTJ (ANSI)
	7.2 Bolts & Nuts float removal flange
0	without (Float removal flange (bottom side) = end cap)
61	M24 x 120 mm; mat. steel zinced; Flange DN 50 PN 10(
62	M24 x 120 mm; mat. SS 1.4301; Flange DN 50 PN 10(
63	M24 x 120 mm; mat. PTFE-coated; Flange 2510 DN50 PN 10(
FA	5/8" x 108 mm; RF; mat. A193B7/A1942H zinced steel; flange 2" ANSI 600 lbs, ANSI B16.5
FB	5/8" x 108 mm; RF; mat. A193B8 / A1948M SS; flange 2" ANSI 600 lbs, ANSI B16.5
FC	5/8" x 108 mm; RTJ; mat. A193B7/A1942H zinced steel, flange 2" ANSI 600 lbs; ANSI B16.5
FD	5/8" x 108 mm; RTJ; mat. A193B8 / A1948M SS; flange 2" ANSI 600 lbs, ANSI B16.5
FT	5/8" x 108 mm; RF; mat. A193B8 / A1948M PTFE-coated; flange 2" ANSI 600 lbs, ANSI B16.5
FV	5/8" x 108 mm; RTJ; mat. A193B8/A1948M PTFE-coated, flange 2" ANSI 600 lbs; ANSI B16.5
	8. Drain plug
0	without
1	Drain plug G 1/2" with soft iron gasket
2	Drain plug 1/2" NPT
3	Drain plug 3/4" NPT
4	Drain plug 1" NPT
	9. Additional drain flange, open
0	without
1	Drain stud with flange DN 15 PN 100
2	Drain stud with flange DN 25 PN 100
3	Drain stud with flange DN 32 PN 100
4	Drain stud with flange DN 40 PN 100
A	Drain stud with flange 1/2" ANSI 600 lbs
B	Drain stud with flange 3/4" ANSI 600 lbs
C	Drain stud with flange 1" ANSI 600 lbs
D	Drain stud with flange 1 1/4" ANSI 600 lbs
E	Drain stud with flange 1 1/2" ANSI 600 lbs

Mag. Level Gauge
ITA-10 & ITA-10.0 PN100/600 lbs

Order codes for mag. level gauge type ITA-10 & ITA-10.0 PN100/600 lbs

Code	Description
	9.1 Drain flange with concentric reducer (X-ray testing)
0	without
1	DN 15 PN 100
2	DN 25 PN 100
3	DN 32 PN 100
4	DN 40 PN 100
A	1/2" ANSI 600 lbs
B	3/4" ANSI 600 lbs
C	1" ANSI 600 lbs
D	1 1/4" ANSI 600 lbs
E	1 1/2" ANSI 600 lbs
	9.2 Surface open drain flange
0	without
B	Standard-Surface RF
D	Surface Form E Rz=16
E	Surface RFSF (smooth finished)
F	Surface groove (DIN2512)
G	Surface groove large
H	Surface tongue (DIN2512)
K	Surface tongue-large
L	Surface RTJ (ANSI)
	10. Float pipe top end finish
0	End Cap
1	Flange with blind flange DN 50 PN 100
A	Flange with blind flange 2" ANSI 600 lbs
	10.1 Surface float pipe top end finish flange (only DN50 or 2")
0	without
B	Surface Form E Rz=16
D	Surface groove (DIN2512)
E	Surface tongue (DIN2512)
F	Dichtleiste RF - RA = 3,2 bis 6,3
G	Surface RFSF (ANSI)
H	Surface groove large ANSI
K	Surface tongue-large ANSI
L	Surface RTJ (ANSI)
	10.2 Bolts & nuts float pipe top end finish flange
0	without
61	M24 x 120 mm; mat. steel zinced; Flange DN 50 PN 10(
62	M24 x 120 mm; mat. SS 1.4301; Flange DN 50 PN 10(
63	M24 x 120 mm; mat. PTFE-coated; Flange 2510 DN50 PN 10
FA	5/8" x 108 mm; RF; mat. A193B7/A1942H zinced steel; flange 2" ANSI 600 lbs, ANSI B16.5
FB	5/8" x 108 mm; RF; mat. A193B8 / A1948M SS; flange 2" ANSI 600 lbs, ANSI B16.5

Mag. Level Gauge
ITA-10 & ITA-10.0 PN100/600 lbs

Order codes for mag. level gauge type ITA-10 & ITA-10.0 PN100/600 lbs

Code	Description
	10.2 Bolts & nuts float pipe top end finish flange (Continuation)
FC	5/8" x 108 mm; RTJ; mat. A193B7/A1942H zinced steel, flange 2" ANSI 600 lbs; ANSI B16.5
FD	5/8" x 108 mm; RTJ; mat. A193B8 / A1948M SS; flange 2" ANSI 600 lbs, ANSI B16.5
FT	5/8" x 108 mm; RF; mat. A193B8 / A1948M PTFE-coated; flange 2" ANSI 600 lbs, ANSI B16.5
FV	5/8" x 108 mm; RTJ; mat. A193B8/A1948M PTFE-coated, flange 2" ANSI 600 lbs; ANSI B16.5
	11. Vent plug at top end
0	without
1	Vent plug G 1/2" with soft iron gasket
2	Vent plug 1/2" NPT
3	Vent plug 3/4" NPT
4	Vent plug 1" NPT
	11.1 Vent flange welded to end cap instead of vent plug
0	without
1	Flange DN 15 PN 100 (socket weld construction to endcap)
2	Flange DN 25 PN 100 (socket weld construction to endcap)
3	Flange DN 32 PN 100 (socket weld construction to endcap)
4	Flange DN 40 PN 100 (socket weld construction to endcap)
A	Flange 1/2" ANSI 600 lbs (socket weld construction to endcap)
B	Flange 3/4" ANSI 600 lbs (socket weld construction to endcap)
C	Flange 1" ANSI 600 lbs (socket weld construction to endcap)
D	Flange 1 1/4" ANSI 600 lbs (socket weld construction to endcap)
E	Flange 1 1/2" ANSI 600 lbs (socket weld construction to endcap)
	11.2 Vent flange with concentric reducer (X-ray testing)
0	without
1	DN 15 PN 100
2	DN 25 PN 100
3	DN 32 PN 100
4	DN 40 PN 100
A	1/2" ANSI 600 lbs
B	3/4" ANSI 600 lbs
C	1" ANSI 600 lbs
D	1 1/4" ANSI 600 lbs
E	1 1/2" ANSI 600 lbs
	11.3 Surface vent flange welded to end cap(only DN50 or 2")
0	without
B	Surface Form E Rz=16
D	Surface groove (DIN2512)
E	Surface tongue (DIN2512)
F	Standard-Surface RF
G	Surface RFSF (smooth finished)
H	Surface groove large
K	Surface tongue-large
L	Surface RTJ (ANSI)

Mag. Level Gauge
ITA-10 & ITA-10.0 PN100/600 lbs

Order codes for mag. level gauge type ITA-10 & ITA-10.0 PN100/600 lbs

Code	Description
	12. Counter flanges
0	without
1	DN 15 PN 100
2	DN 25 PN 100
3	DN 32 PN 100
4	DN 40 PN 100
5	DN 50 PN 100
A	1/2" 600 lbs
B	3/4" 600 lbs
C	1" 600 lbs
D	1 1/4" 600 lbs
E	1 1/2" 600 lbs
F	2" 600 lbs
	12.1 Surface counter flanges
0	without
B	Surface Form E Rz=16
D	Surface groove (DIN2512)
E	Surface tongue (DIN2512)
F	Standard-Surface RF
G	Surface RFSF (smooth finished)
H	Surface groove large
K	Surface tongue-large
L	Surface RTJ (ANSI)
	12.2 Bolts & Nuts counter flanges
0	without
61	M24 x 120 mm; mat. steel zinced; Flange DN 50 PN 10(
62	M24 x 120 mm; mat. SS 1.4301; Flange DN 50 PN 10(
63	M24 x 120 mm; mat. PTFE-coated; Flange 2510 DN50 PN 10
FA	5/8" x 108 mm; RF; mat. A193B7/A1942H zinced steel; flange 2" ANSI 600 lbs, ANSI B16.5
FB	5/8" x 108 mm; RF; mat. A193B8 / A1948M SS; flange 2" ANSI 600 lbs, ANSI B16.5
FC	5/8" x 108 mm; RTJ; mat. A193B7/A1942H zinced steel, flange 2" ANSI 600 lbs; ANSI B16.5
FD	5/8" x 108 mm; RTJ; mat. A193B8 / A1948M SS; flange 2" ANSI 600 lbs, ANSI B16.5
FT	5/8" x 108 mm; RF; mat. A193B8 / A1948M PTFE-coated; flange 2" ANSI 600 lbs, ANSI B16.5
FV	5/8" x 108 mm; RTJ; mat. A193B8/A1948M PTFE-coated, flange 2" ANSI 600 lbs; ANSI B16.5
	13. Additional bracket welded to the float pipe
0	without
H	Bracket

Mag. Level Gauge
ITA-10 & ITA-10.0 PN100/600 lbs

Order codes for mag. Level Gauges type: ITA-10 & ITA-10.0 PN100/600 lbs

	Description						
Floats							
Code	**Pressure [bar]**	**Material**	**Diameter [mm]**	**Length [mm]**	**min. Density [kg/dm³]**	**vented [Y/N]**	**Notes**
10V324K3	100	316L	52	265	0,6122	Y	only with 316SS or Aluminium indication ra
10T024K1	80	Titanium	50,8	265	0,7011	N	do not use for hydrogen or alcohol compound
10T024K3	80	Titanium	50,8	265	0,5823	N	only with 316SS or Aluminium indication rail; do not use for hydrogen or alcohol compound
10T030K1	80	Titanium	50,8	325	0,6212	N	do not use for hydrogen or alcohol compound
10T030K3	80	Titanium	50,8	325	0,5275	N	only with 316SS or Aluminium indication rail; do not use for hydrogen or alcohol compound
10T040K1	80	Titanium	50,8	425	0,5515	N	do not use for hydrogen or alcohol compound
10T040K3	80	Titanium	50,8	425	0,4871	N	only with 316SS or Aluminium indication rail; do not use for hydrogen or alcohol compound
10T050K1	80	Titanium	50,8	525	0,5095	N	do not use for hydrogen or alcohol compound
10T050K3	80	Titanium	50,8	525	0,4574	N	only with 316SS or Aluminium indication rail; do not use for hydrogen or alcohol compound
10T060K1	80	Titanium	50,8	625	0,4632	N	do not use for hydrogen or alcohol compound
10T060K3	80	Titanium	50,8	625	0,4209	N	only with 316SS or Aluminium indication rail; do not use for hydrogen or alcohol compound
10T124K1	100	Titanium	50,8	265	0,8299	N	do not use for hydrogen or alcohol compound
10T124K3	100	Titanium	50,8	265	0,7006	N	only with 316SS or Aluminium indication rail; Float for high-temperature applications; do not use for hydrogen or alcohol compound
10T130K1	100	Titanium	50,8	325	0,7617	N	do not use for hydrogen or alcohol compound
10T130K3	100	Titanium	50,8	325	0,6594	N	only with 316SS or Aluminium indication rail; do not use for hydrogen or alcohol compound
10T140K1	100	Titanium	50,8	425	0,6779	N	do not use for hydrogen or alcohol compound
10T140K3	100	Titanium	50,8	425	0,6075	N	only with 316SS or Aluminium indication rail; do not use for hydrogen or alcohol compound
10T150K1	100	Titanium	50,8	525	0,6321	N	do not use for hydrogen or alcohol compound
10T150K3	100	Titanium	50,8	525	0,5775	N	only with 316SS or Aluminium indication rail; do not use for hydrogen or alcohol compound
10T160K1	100	Titanium	50,8	625		N	do not use for hydrogen or alcohol compound
10T160K3	100	Titanium	50,8	625		N	only with 316SS or Aluminium indication rail; do not use for hydrogen or alcohol compound

For additional accessories please refer to the chapters "Special equipment" and "Electrical accessories and Switches"

3.19.3 Order code scheme for ITA-10 & ITA-10.0

1. Type of level gauge ITA-10 or ITA-10.0	2. C to C distance in mm [or inches]	3. Design	4. C to C distance > 5000 mm	5. Process connection [side/side]	5.1 Surface side flanges	6. Side studs welded with T-pieces for 100 % X-ray-testing	7. Float removal flange	7.1 Surface float removal flange	7.2 Bolts & nuts float removal flange	8. Drain plug	9. Additional drain flange, open
ITA-10											
ITA-10.0											

9.1 Drain flange with concentric reducer (X-ray testing)	9.2 Surface open drain flange	10. Float pipe top end finish	10.1 Surface top end finish flange	10.2 Bolts and nuts rop end finish flange	11. Vent plug at top end	11.1 Vent flange welded to end cap instead of vent plug	11.2 Vent flange with concentric reducer (X-ray testing)	11.3 Surface vent flange welded to end cap	12. Counter flanges	12.1 Surface counter flanges	12.2 Bolts & nuts counter flanges	13. Additional bracket welded to the float pipe	14. Float

3.20.1 ITA-11

Characteristics: PN160 / Float pipe and flange material: 1.4404

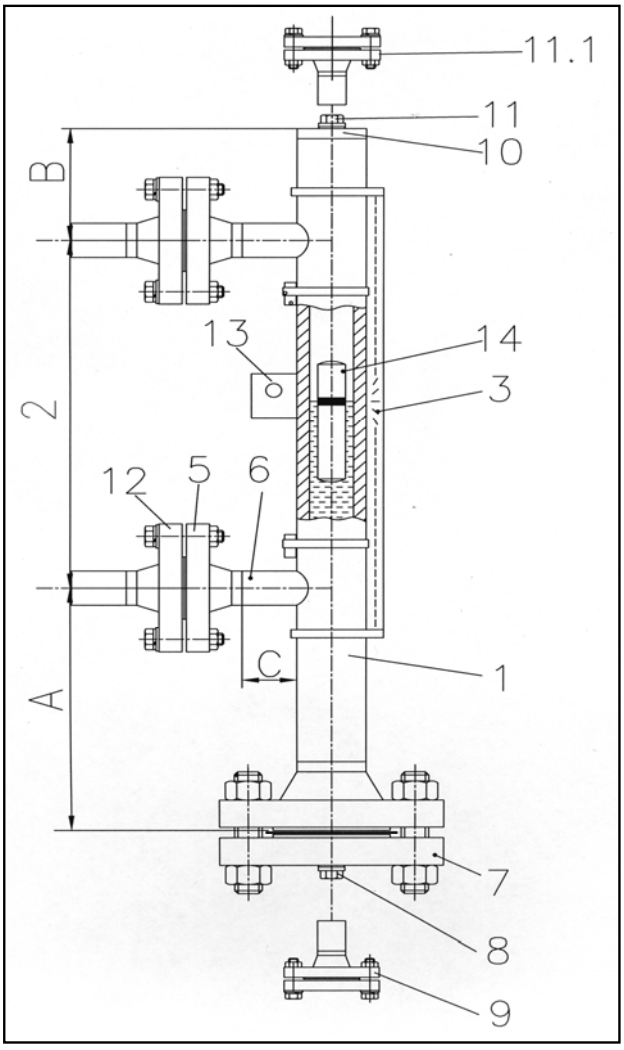

Key:

1 Float pipe welded, dimensions 60,3 x 3,91 mm
2 c to c distance
3 Design (indication rail)
5 Process connection side/side
6 Side studs welded with T pieces for 100 % X-ray testing
7 Float removal flange
8 Drain plug
9 Additional drain flange, open
10 Float pipe top end finish
11 Vent plug
12 Counter flanges
13 Additional bracket
14 Float pipe seamless
15 Float

Technical specifications magnetic level gauge type ITA-11

Principle:	Communicating tubes with magnetic float
Mounting position:	vertical
Measuring range:	**max. 5000 mm (one-part)** > 5000 mm 2- or multipart
Pipe diameter:	**60,3 x 3,91 mm seamless,** **60,3 x 3,6 mm seamless** **welding stud** or butt-weld connection wie T-pieces
Process connection:	to specify: **Flanges DN15…50 (1/2"…2" 1500#),** **Welding or threaded stud**
Drain/Vent connections:	**Plug 1/2"NPT**
Pipe material:	**1.4404**; 1.4435; 1.4539; Hastelloy C4 (2.4610); Inconel 625 (2.4856); Inconel 825 (2.4858); Titan (3.7035) (other materials on request)
Flange material:	same as pipe material
Float material:	**316Ti (1.4571);** Titanium***
Operation temperature:	-50..+400 °C
Operation pressure:	max. 160 bar
Operation density:	min. 0,6008 kg/dm³
Viscosity:	max. 5000 mPa s
Bolts & Nuts:	**CS** SS
Gasket	**Spiral wound, 316Ti** **Cam profile, 316Ti**
Indication rail:	Makrolon up to 120 °C Aluminium up to 400 °C 1.4301 up to 400 °C
Float types:	Cylindical, sealed type Length: **-270 mm** -330 mm -430 mm -530 mm
Standard dimensions:	-A = 240 mm* -B = 130 mm** - C = 70 mm

Base equipment printed in bold letters!
***for densities < 0,4243 kg/dm³ enlarge the scale A**
**** for end cap B=170 mm for WN**
*****not for use for hydrogen or alcohol-compounds**

3.20.2 ITA-11.0

Characteristics: PN160 / Float pipe: 1.4404 and flanges : CS

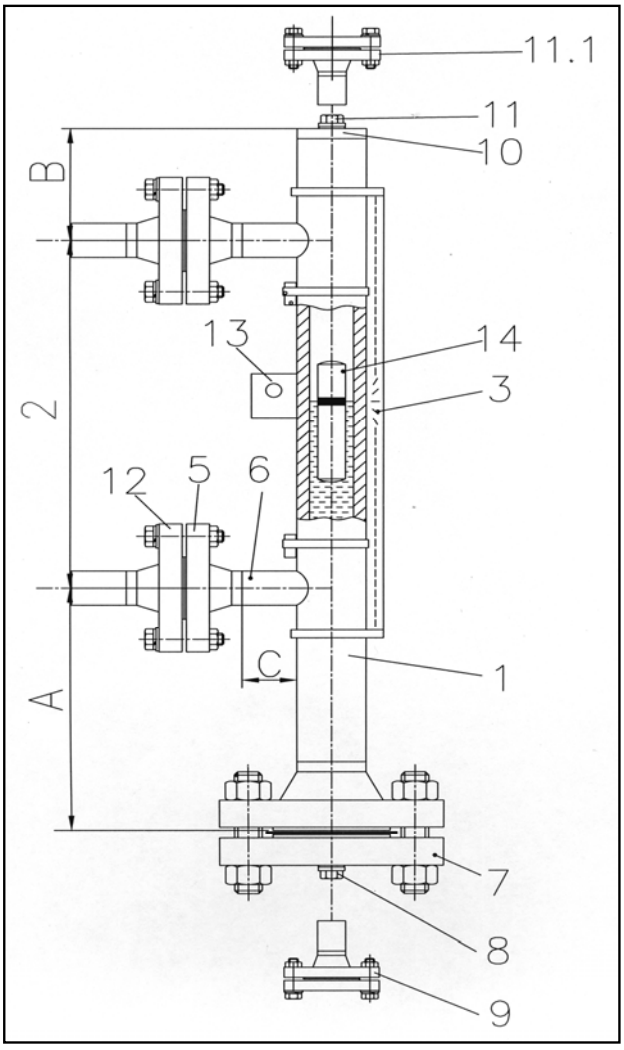

Key:

1 Float pipe welded, dimensions 60,3 x 3,91 mm
2 c to c distance
3 Design (indication rail)
5 Process connection side/side
6 Side studs welded with T pieces for 100 % X-ray testing
7 Float removal flange
8 Drain plug
9 Additional drain flange, open
10 Float pipe top end finish
11 Vent plug
12 Counter flanges
13 Additional bracket
14 Float pipe seamless
15 Float

Technical specifications magnetic level gauge type ITA-11.0

Principle:	Communicating tubes with magnetic float
Mounting position:	vertical
Measuring range:	**max. 5000 mm (one-part)** > 5000 mm 2- or multipart
Pipe diameter:	**60,3 x 3,91 mm seamless,** **60,3 x 3,6 mm seamless** **welding stud** or butt-weld connection wie T-pieces
Process connection:	to specify: **Flanges DN15…50 (1/2"…2" 1500#),** **Welding or threaded stud**
Drain/Vent connections:	**Plug 1/2"NPT**
Pipe material:	**1.4404**; 1.4435; 1.4539; Hastelloy C4 (2.4610); Inconel 625 (2.4856); Inconel 825 (2.4858); Titan (3.7035) (other materials on request)
Flange material:	**CS**
Float material:	**316Ti (1.4571);** Titanium***
Operation temperature:	-50..+400 °C
Operation pressure:	max. 160 bar
Operation density:	min. 0,6008 kg/dm³
Viscosity:	max. 5000 mPa s
Bolts & Nuts:	**CS** SS
Gasket	**Spiral wound, 316Ti** **Cam profile, 316Ti**
Indication rail:	Makrolon up to 120 °C Aluminium up to 400 °C 1.4301 up to 400 °C
Float types:	Cylindical, sealed type Length: **-270 mm** -330 mm -430 mm -530 mm
Standard dimensions:	-A = 240 mm* -B = 130 mm** - C = 70 mm

Base equipment printed in bold letters!
***for densities < 0,4243 kg/dm³ enlarge the scale A**
**** for end cap B=170 mm for WN**
*****not for use for hydrogen or alcohol-compounds**

3.20.3 Order codes ITA-11 & ITA-11.0

Mag. Level Gauge
ITA-11 & ITA-11.0 PN160/1500 lbs

Order codes for mag. level gauge type ITA-11 & ITA-11.0 PN160/1500 lbs

Code	Description
ITA-11	**1. Float pipe seamless Dimensions 60,3 x 3,91 mm**
	2. C to C distance
L	C to C distance in mm
	3. Design
0	without indication rail each 100 mm
1	Indication rail material: Makrolon max. 120 °C; each 100 mm
2	Indication rail material: Aluminium max. 400 °C, pro 100 mm
3	Indication rail material: 1.4401 max. 400 °C, pro 100 mm
	4. C to C distance < 5000 mm
A	< 5000 mm - without flange connection; DN 50 PN 160
B	> 5000 mm - with flange connection; DN 50 PN 160
	5. Process connections side/side
Y	welding connection (please specify)
Z	threaded connection (please specify)
1	Flanges DN 15 PN 160
2	Flanges DN 25 PN 160
3	Flanges DN 32 PN 160
4	Flanges DN 50 PN 160
A	Flanges 1/2" ANSI 1500 lbs
B	Flanges 3/4" ANSI 1500 lbs
C	Flanges 1" ANSI 1500 lbs
D	Flanges 1 1/4" ANSI 1500 lbs
E	Flanges 1 1/2" ANSI 1500 lbs
F	Flanges 2" ANSI 1500 lbs
	5.1 Surface side flanges
0	without
B	Standard-Surface RF
D	Surface Form E Rz=16
E	Surface RFSF (smooth finished)
F	Surface groove (DIN2512)
G	Surface groove large
H	Surface tongue (DIN2512)
K	Surface tongue-large
L	Surface RTJ (ANSI)
	6. Side studs welded with T-pieces for 100 % X-ray testing
0	without
T	T-pieces

Mag. Level Gauge
ITA-11 & ITA-11.0 PN160/1500 lbs

Order codes for mag. level gauge type ITA-11 & ITA-11.0 PN160/1500 lbs

Code	Description
	7. Float removal flange (bottom side)
1	Flange DN 50 PN 160 incl. blind flange
A	Flange 2" ANSI 1500 lbs incl. blind flange
2	Flange DN 50 PN 160 prepared for shut off valve on side
B	Flange 2" ANSI 1500 lbs prepared for shut off valve on side
	7.1 Surface float removal flange (bottom side) (only DN50 or 2")
B	Standard-Surface RF
D	Surface Form E Rz=16
E	Surface RFSF (smooth finished)
F	Surface groove (DIN2512)
G	Surface groove large
H	Surface tongue (DIN2512)
K	Surface tongue-large
L	Surface RTJ (ANSI)
	7.2 Bolts & Nuts float removal flange
0	without (Float removal flange (bottom side) = end cap)
61	M24 x 120 mm; mat. steel zinced; Flange DN 50 PN 160
62	M24 x 120 mm; mat. SS 1.4301; Flange DN 50 PN 160
FA	7/8" x 150 mm; RF; mat. A193B7/A1942H zinced steel; flange 2" ANSI 1500 lbs, ANSI B16.5
FB	7/8" x 150 mm; RF; mat. A193B8 / A1948M SS; flange 2" ANSI 1500 lbs, ANSI B16.5
FC	7/8" x 150 mm; RTJ; mat. A193B7/A1942H zinced steel, flange 2" ANSI 1500 lbs; ANSI B16.5
FD	7/8" x 150 mm; RTJ; mat. A193B8 / A1948M SS; flange 2" ANSI 1500 lbs, ANSI B16.5
FT	7/8" x 150 mm; RF; mat. A193B8 / A1948M PTFE-coated; flange 2" ANSI 1500 lbs, ANSI B16.5
FV	7/8" x 150 mm; RTJ; mat. A193B8/A1948M PTFE-coated, flange 2" ANSI 1500 lbs; ANSI B16.5
	8. Drain plug
0	without
1	Drain plug G 1/2" with soft iron gasket
2	Drain plug 1/2" NPT
3	Drain plug 3/4" NPT
4	Drain plug 1" NPT
	9. Additional drain flange, open
0	without
1	Drain stud with flange DN 15 PN 160
2	Drain stud with flange DN 25 PN 160
3	Drain stud with flange DN 32 PN 160
4	Drain stud with flange DN 40 PN 160
A	Drain stud with flange 1/2" ANSI 1500 lbs
B	Drain stud with flange 3/4" ANSI 1500 lbs
C	Drain stud with flange 1" ANSI 1500 lbs
D	Drain stud with flange 1 1/4" ANSI 1500 lbs
E	Drain stud with flange 1 1/2" ANSI 1500 lbs

Mag. Level Gauge
ITA-11 & ITA-11.0 PN160/1500 lbs

Order codes for mag. level gauge type ITA-11 & ITA-11.0 PN160/1500 lbs

Code	Description
	9.1 Drain flange with concentric reducer (X-ray testing)
0	without
1	DN 15 PN 160
2	DN 25 PN 160
3	DN 32 PN 160
4	DN 40 PN 160
A	1/2" ANSI 1500 lbs
B	3/4" ANSI 1500 lbs
C	1" ANSI 1500 lbs
D	1 1/4" ANSI 1500 lbs
E	1 1/2" ANSI 1500 lbs
	9.2 Surface open drain flange
0	without
B	Standard-Surface RF
D	Surface Form E Rz=16
E	Surface RFSF (smooth finished)
F	Surface groove (DIN2512)
G	Surface groove large
H	Surface tongue (DIN2512)
K	Surface tongue-large
L	Surface RTJ (ANSI)
	10. Float pipe top end finish
1	End cap
2	Flange with blind flange DN 50 PN 160
A	Flange with blind flange 2" ANSI 1500 lbs
	10.1 Surface float pipe top end finish flange (only DN50 or 2")
0	without
B	Standard-Surface RF
D	Surface Form E Rz=16
E	Surface RFSF (smooth finished)
F	Surface groove (DIN2512)
G	Surface groove large
H	Surface tongue (DIN2512)
K	Surface tongue-large
L	Surface RTJ (ANSI)
	10.2 Bolts & nuts float pipe top end finish flange
0	without
61	M24 x 120 mm; mat. steel zinced; Flange DN 50 PN 160
62	M24 x 120 mm; mat. SS 1.4301; Flange DN 50 PN 160
FA	7/8" x 150 mm; RF; mat. A193B7/A1942H zinced steel; flange 2" ANSI 1500 lbs, ANSI B16.5
FB	7/8" x 150 mm; RF; mat. A193B8 / A1948M SS; flange 2" ANSI 1500 lbs, ANSI B16.5

Mag. Level Gauge
ITA-11 & ITA-11.0 PN160/1500 lbs

Order codes for mag. level gauge type ITA-11 & ITA-11.0 PN160/1500 lbs

Code	Description
	10.2 Bolts & nuts float pipe top end finish flange (Continuation)
FC	7/8" x 150 mm; RTJ; mat. A193B7/A1942H zinced steel, flange 2" ANSI 1500 lbs; ANSI B16.5
FD	7/8" x 150 mm; RTJ; mat. A193B8 / A1948M SS; flange 2" ANSI 1500 lbs, ANSI B16.5
FT	7/8" x 150 mm; RF; mat. A193B8 / A1948M PTFE-coated; flange 2" ANSI 1500 lbs, ANSI B16.5
FV	7/8" x 150 mm; RTJ; mat. A193B8/A1948M PTFE-coated, flange 2" ANSI 1500 lbs; ANSI B16.5
	11. Vent plug at top end
0	without
1	Vent plug G 1/2" with soft iron gasket
2	Vent plug 1/2" NPT
3	Vent plug 3/4" NPT
4	Vent plug 1" NPT
	11.1 Vent flange welded to end cap instead of vent plug
0	without
1	Flange DN 15 PN 160 (socket weld construction to endcap)
2	Flange DN 25 PN 160 (socket weld construction to endcap)
3	Flange DN 32 PN 160 (socket weld construction to endcap)
4	Flange DN 40 PN 160 (socket weld construction to endcap)
A	Flange 1/2" ANSI 1500 lbs (socket weld construction to endcap)
B	Flange 3/4" ANSI 1500 lbs (socket weld construction to endcap)
C	Flange 1" ANSI 1500 lbs (socket weld construction to endcap)
D	Flange 1 1/4" ANSI 1500 lbs (socket weld construction to endcap)
E	Flange 1 1/2" ANSI 1500 lbs (socket weld construction to endcap)
	11.2 Vent flange with concentric reducer (X-ray testing)
0	without
1	DN 15 PN 160
2	DN 25 PN 160
3	DN 32 PN 160
4	DN 40 PN 160
A	1/2" ANSI 1500 lbs
B	3/4" ANSI 1500 lbs
C	1" ANSI 1500 lbs
D	1 1/4" ANSI 1500 lbs
E	1 1/2" ANSI 1500 lbs
	11.3 Surface vent flange welded to end cap (only DN50 or 2")
0	without
B	Standard-Surface RF
D	Surface Form E Rz=16
E	Surface RFSF (smooth finished)
F	Surface groove (DIN2512)
G	Surface groove large
H	Surface tongue (DIN2512)
K	Surface tongue-large
L	Surface RTJ (ANSI)

Mag. Level Gauge
ITA-11 & ITA-11.0 PN160/1500 lbs

Order codes for mag. level gauge type ITA-11 & ITA-11.0 PN160/1500 lbs

Code	Description
	12. Counter flanges
0	without
1	DN 15 PN 160
2	DN 25 PN 160
3	DN 32 PN 160
4	DN 40 PN 160
5	DN 50 PN 100
A	1/2" ANSI 1500 lbs
B	3/4" ANSI 1500 lbs
C	1" ANSI 1500 lbs
D	1 1/4" ANSI 1500 lbs
E	1 1/2" ANSI 1500 lbs
F	2" 600 lbs
	12.1 Surface counter flanges
0	without
B	Standard-Surface RF
D	Surface Form E Rz=16
E	Surface RFSF (smooth finished)
F	Surface groove (DIN2512)
G	Surface groove large
H	Surface tongue (DIN2512)
K	Surface tongue-large
L	Surface RTJ (ANSI)
	12.2 Bolts & Nuts counter flanges
0	without
61	M24 x 120 mm; mat. steel zinced; Flange DN 50 PN 160
62	M24 x 120 mm; mat. SS 1.4301; Flange DN 50 PN 160
FA	7/8" x 150 mm; RF; mat. A193B7/A1942H zinced steel; flange 2" ANSI 1500 lbs, ANSI B16.5
FB	7/8" x 150 mm; RF; mat. A193B8 / A1948M SS; flange 2" ANSI 1500 lbs, ANSI B16.5
FC	7/8" x 150 mm; RTJ; mat. A193B7/A1942H zinced steel, flange 2" ANSI 1500 lbs; ANSI B16.5
FD	7/8" x 150 mm; RTJ; mat. A193B8 / A1948M SS; flange 2" ANSI 1500 lbs, ANSI B16.5
FT	7/8" x 150 mm; RF; mat. A193B8 / A1948M PTFE-coated; flange 2" ANSI 1500 lbs, ANSI B16.5
FV	7/8" x 150 mm; RTJ; mat. A193B8/A1948M PTFE-coated, flange 2" ANSI 1500 lbs; ANSI B16.5
	13. Additional bracket welded to the float pipe
0	without
H	Bracket

Mag. Level Gauge
ITA-11 & ITA-11.0 PN160/1500 lbs

Order codes for mag. Level Gauges type: ITA-11 & ITA-11.0 PN160/1500 lbs

	Description						
Floats							
Code	**Pressure [bar]**	**Material**	**Diameter [mm]**	**Length [mm]**	**min. Density [kg/dm³]**	**vented [Y/N]**	**Notes**
11V324K2	160	316L	46	265	0,7736	Y	
11T330K2	160	Titanium	46	325	0,4901	Y	do not use for hydrogen or alcohol compound
11T024K1	130	Titanium	45	265	0,86	N	do not use for hydrogen or alcohol compound
11T024K3	130	Titanium	45	265	0,745	N	only with 316SS or Aluminium indication rail; do not use for hydrogen or alcohol compounds
11T030K1	130	Titanium	45	325	0,7822	N	do not use for hydrogen or alcohol compound
11T030K3	130	Titanium	45	325	0,6949	N	only with 316SS or Aluminium indication rail; do not use for hydrogen or alcohol compounds
11T040K1	130	Titanium	45	425	0,7028	N	do not use for hydrogen or alcohol compound
11T040K3	130	Titanium	45	425	0,6391	N	only with 316SS or Aluminium indication rail; do not use for hydrogen or alcohol compounds
11T050K1	130	Titanium	45	525	0,6587	N	do not use for hydrogen or alcohol compound
11T060K1	130	Titanium	45	625		N	do not use for hydrogen or alcohol compound
11T050K3	150	Titanium	45	525	0,6106	N	only with 316SS or Aluminium indication rail; do not use for hydrogen or alcohol compounds
11T060K3	150	Titanium	45	625		N	only with 316SS or Aluminium indication rail; do not use for hydrogen or alcohol compounds
11T124K3	150	Titanium	46	265	0,7324	N	only with 316SS or Aluminium indication rail; do not use for hydrogen or alcohol compounds
11T130K3	150	Titanium	46	325	0,7042	N	only with 316SS or Aluminium indication rail; do not use for hydrogen or alcohol compounds
11T140K3	150	Titanium	46	425	0,6164	N	only with 316SS or Aluminium indication rail; do not use for hydrogen or alcohol compounds
11T150K3	150	Titanium	46	525	0,6008	N	only with 316SS or Aluminium indication rail; do not use for hydrogen or alcohol compounds
11T224K1	160	Titanium	42	265	0,9768	N	do not use for hydrogen or alcohol compound
11T224K3	160	Titanium	42	265	0,812	N	only with 316SS or Aluminium indication rail; do not use for hydrogen or alcohol compounds
11T230K1	160	Titanium	42	325	0,8871	N	do not use for hydrogen or alcohol compound
11T230K3	160	Titanium	42	325	0,7613	N	only with 316SS or Aluminium indication rail; do not use for hydrogen or alcohol compounds
11T240K1	160	Titanium	42	425	0,7832	N	do not use for hydrogen or alcohol compound
11T240K3	160	Titanium	42	425	0,6934	N	only with 316SS or Aluminium indication rail; do not use for hydrogen or alcohol compounds
11T250K1	160	Titanium	42	525	0,7268	N	do not use for hydrogen or alcohol compound
11T250K3	160	Titanium	42	525	0,6571	N	only with 316SS or Aluminium indication rail; do not use for hydrogen or alcohol compounds
11T260K1	160	Titanium	42	625		N	do not use for hydrogen or alcohol compound
11T260K3	160	Titanium	42	625		N	only with 316SS or Aluminium indication rail; do not use for hydrogen or alcohol compounds

For additional accessories please refer to the chapters "Special equipment" and "Electrical accessories and Switches"

3.20.3 Order code scheme for ITA-11 & ITA-11.0

1. Type of level gauge ITA-11 or ITA-11.0	2. C to C distance in mm [or inches]	3. Design	4. C to C distance > 5000 mm	5. Process connection [side/side]	5.1 Surface side flanges	6. Side studs welded with T-pieces for 100 % X-ray-testing	7. Float removal flange	7.1 Surface float removal flange	7.2 Bolts & nuts float removal flange	8. Drain plug	9. Additional drain flange, open
ITA-11											
ITA-11.0											

9.1 Drain flange with concentric reducer (X-ray testing)	9.2 Surface open drain flange	10. Float pipe top end finish	10.1 Surface top end finish flange	10.2 Bolts and nuts rop end finish flange	11. Vent plug at top end	11.1 Vent flange welded to end cap instead of vent plug	11.2 Vent flange with concentric reducer (X-ray testing)	11.3 Surface vent flange welded to end cap	12. Counter flanges	12.1 Surface counter flanges	12.2 Bolts & nuts counter flanges	13. Additional bracket welded to the float pipe	14. Float

3.21.1 ITA-12

Characteristics: PN250 / Float pipe and flange material: 1.4404

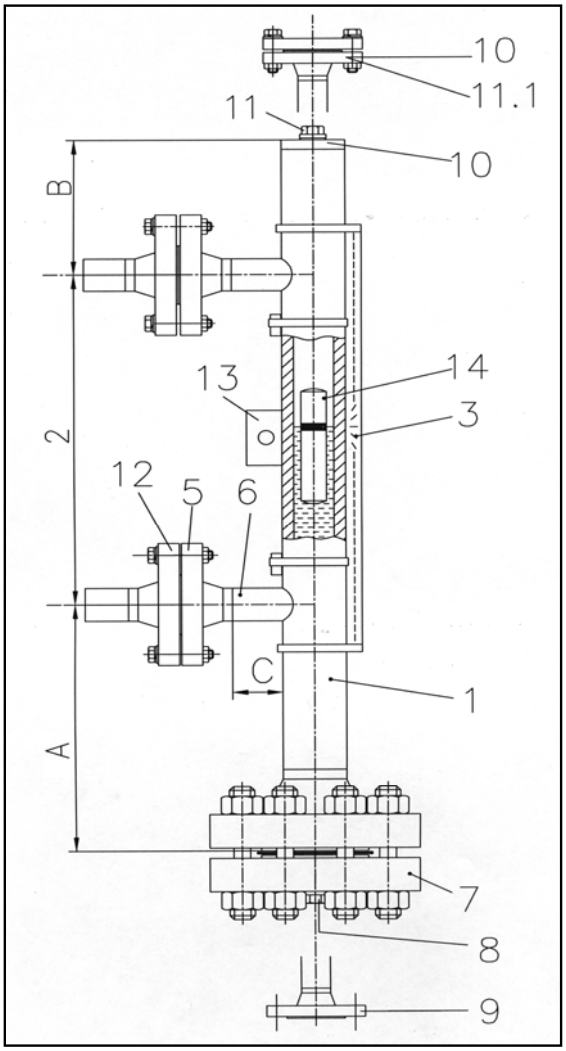

Key:

1 Float pipe welded, dimensions 60,3 x 5,54 mm
2 c to c distance
3 Design (indication rail)
5 Process connection side/side
6 Side studs welded with T pieces for 100 % X-ray testing
7 Float removal flange
8 Drain plug
9 Additional drain flange, open
10 Float pipe top end finish
11 Vent plug
12 Counter flanges
13 Additional bracket
14 Float pipe seamless
15 Float

Technical specifications magnetic level gauge type ITA-12

Principle:	Communicating tubes with magnetic float
Mounting position:	vertical
Measuring range:	**max. 5000 mm (one-part)** > 5000 mm 2- or multipart
Pipe diameter:	**60,3 x 5,54 mm seamless,** **welding stud** or butt-weld connection wie T-pieces
Process connection:	to specify: **Flanges DN15…50 (1/2"…2" 1500#),** **Welding or threaded stud**
Drain/Vent connections:	**Plug 1/2"NPT**
Pipe material:	**1.4404**; 1.4435; 1.4539; Hastelloy C4 (2.4610); Inconel 625 (2.4856); Inconel 825 (2.4858); Titan (3.7035) (other materials on request)
Flange material:	same as pipe material
Float material:	**316Ti (1.4571);** Titanium***
Operation temperature:	-50..+400 °C
Operation pressure:	max. 250 bar
Operation density:	min. 0,57 kg/dm³ (vented float) min. 0,828 kg/dm³ (sealed float)
Viscosity:	max. 5000 mPa s
Bolts & Nuts:	**CS** SS
Gasket	**Spiral wound, 316Ti** **Cam profile, 316Ti**
Indication rail:	Makrolon up to 120 °C Aluminium up to 400 °C 1.4301 up to 400 °C
Float types:	Cylindical, sealed type (Titanium) Length: **-270 mm** -330 mm
Standard dimensions:	-A = 240 mm* -B = 130 mm** - C = 100 mm

Base equipment printed in bold letters!
***for densities < 0,57 kg/dm³ enlarge the scale A**
**** for end cap B=170 mm for WN**
*****not for use for hydrogen or alcohol-compounds**

3.21.2 ITA-12.0

Characteristics: PN250 / Float pipe: 1.4404 and flanges : CS

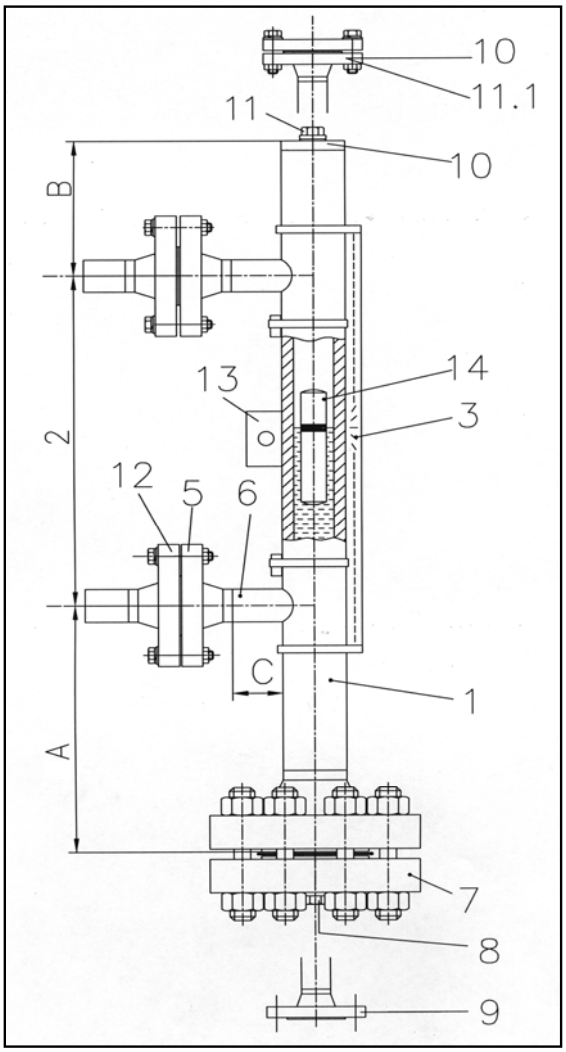

Key:

1 Float pipe welded, dimensions 60,3 x 5,54 mm
2 c to c distance
3 Design (indication rail)
5 Process connection side/side
6 Side studs welded with T pieces for 100 % X-ray testing
7 Float removal flange
8 Drain plug
9 Additional drain flange, open
10 Float pipe top end finish
11 Vent plug
12 Counter flanges
13 Additional bracket
14 Float pipe seamless
15 Float

Technical specifications magnetic level gauge type ITA-12.0

Principle:	Communicating tubes with magnetic float
Mounting position:	vertical
Measuring range:	**max. 5000 mm (one-part)** > 5000 mm 2- or multipart
Pipe diameter:	**60,3 x 5,54 mm seamless,** **welding stud** or butt-weld connection wie T-pieces
Process connection:	to specify: **Flanges DN15…50 (1/2"…2" 1500#),** **Welding or threaded stud**
Drain/Vent connections:	**Plug 1/2"NPT**
Pipe material:	**1.4404**; 1.4435; 1.4539; Hastelloy C4 (2.4610); Inconel 625 (2.4856); Inconel 825 (2.4858); Titan (3.7035) (other materials on request)
Flange material:	**CS**
Float material:	**316Ti (1.4571);** Titanium***
Operation temperature:	-50..+400 °C
Operation pressure:	max. 250 bar
Operation density:	min. 0,57 kg/dm³ (vented float) min. 0,828 kg/dm³ (sealed float)
Viscosity:	max. 5000 mPa s
Bolts & Nuts:	**CS** SS
Gasket	**Spiral wound, 316Ti** **Cam profile, 316Ti**
Indication rail:	Makrolon up to 120 °C Aluminium up to 400 °C 1.4301 up to 400 °C
Float types:	Cylindical, sealed type (Titanium) Length: **-270 mm** -330 mm
Standard dimensions:	-A = 240 mm* -B = 130 mm** - C = 100 mm

Base equipment printed in bold letters!
***for densities < 0,57 kg/dm³ enlarge the scale A**
**** for end cap B=170 mm for WN**
*****not for use for hydrogen or alcohol-compounds**

3.21.3 Order codes ITA-12 & ITA-12.0

Mag. Level Gauge
ITA-12 & ITA-12.0 PN250/1500 lbs

Order codes for mag. level gauge type ITA-12 & ITA-12.0 PN250/1500 lbs

Code	Description
ITA-12 ITA-12.0	**1. Float pipe seamless Dimensions 60,3 x 5,54 mm**
	2. C to C distance
L	C to C distance in mm
	3. Design
0	without indication rail each 100 mm
1	Indication rail material: Makrolon max. 120 °C; each 100 mm
2	Indication rail material: Aluminium max. 400 °C, pro 100 mm
3	Indication rail material: 1.4401 max. 400 °C, pro 100 mm
	4. C to C distance < 5000 mm
A	< 5000 mm - without flange connection; DN 50 PN 250
B	> 5000 mm - with flange connection; DN 50 PN 250
	5. Process connections side/side
Y	Welding connection (please specify)
Z	Threaded stud (please specify)
0	Flanges DN 15 PN 250
1	Flanges DN 25 PN 250
2	Flanges DN 32 PN 250
3	Flanges DN 40 PN 250
4	Flanges DN 50 PN 250
A	Flanges 1/2" ANSI 1500 lbs
B	Flanges 3/4" ANSI 1500 lbs
C	Flanges 1" ANSI 1500 lbs
D	Flanges 1 1/4" ANSI 1500 lbs
E	Flanges 1 1/2" ANSI 1500 lbs
F	Flanges 2" ANSI 1500 lbs
	5.1 Surface side flanges
0	without
B	Standard-Surface RF
D	Surface Form E Rz=16
E	Surface RFSF (smooth finished)
G	Surface groove large
K	Surface tongue-large
L	Surface RTJ (ANSI)
	6. Side studs welded with T-pieces for 100 % X-ray testing
0	without
T	T-pieces

Mag. Level Gauge
ITA-12 & ITA-12.0 PN250/1500 lbs

Order codes for mag. level gauge type ITA-12 & ITA-12.0 PN250/1500 lbs

Code	Description
	7. Float removal flange (bottom side)
1	Flange DN 50 PN 250 incl. blind flange
A	Flange 2" ANSI 1500 lbs incl. blind flange
2	Flange DN 50 PN 250 prepared for shut off valve on side
B	Flange 2" ANSI 1500 lbs prepared for shut off valve on side
	7.1 Surface float removal flange (bottom side)
B	Standard-Surface RF
D	Surface Form E Rz=16
E	Surface RFSF (smooth finished)
G	Surface groove large
K	Surface tongue-large
L	Surface RTJ (ANSI)
	7.2 Bolts & Nuts float removal flange
0	without (Float removal flange (bottom side) = end cap)
61	M24 x 140 mm; mat. steel zinced; Flange DN 50 PN 250
62	M24 x 140 mm; mat. SS 1.4301; Flange DN 50 PN 250
6X	M24 x 140 mm; mat. steel zinced A193B7 / A1942H; Flange 2" ANSI 1500 lbs
FA	7/8" x 150 mm; RF; mat. A193B7/A1942H zinced steel; flange 2" ANSI 1500 lbs, ANSI B16.5
FB	7/8" x 150 mm; RF; mat. A193B8 / A1948M SS; flange 2" ANSI 1500 lbs, ANSI B16.5
FC	7/8" x 160 mm; RTJ; mat. A193B7/A1942H zinced steel, flange 2" ANSI 1500 lbs; ANSI B16.5
FD	7/8" x 150 mm; RTJ; mat. A193B8 / A1948M SS; flange 2" ANSI 1500 lbs, ANSI B16.5
FT	7/8" x 160 mm; RF; mat. A193B8 / A1948M PTFE-coated; flange 2" ANSI 1500 lbs, ANSI B16.5
FV	7/8" x 160 mm; RTJ; mat. A193B8/A1948M PTFE-coated, flange 2" ANSI 1500 lbs; ANSI B16.5
	8. Drain plug
0	without
1	Drain plug G 1/2" with soft iron gasket
2	Drain plug 1/2" NPT
3	Drain plug 3/4" NPT
4	Drain plug 1" NPT
	9. Additional drain flange, open
0	without
1	Drain-stud with flange DN 15 PN 250
2	Drain-stud with flange DN 25 PN 250
3	Drain-stud with flange DN 32 PN 250
4	Drain-stud with flange DN 40 PN 250
A	Drain-stud with flange 1/2" ANSI 1500 lbs
B	Drain-stud with flange 3/4" ANSI 1500 lbs
C	Drain-stud with flange 1" ANSI 1500 lbs
D	Drain-stud with flange 1 1/4" ANSI 1500 lbs
E	Drain-stud with flange 1 1/2" ANSI 1500 lbs

Mag. Level Gauge
ITA-12 & ITA-12.0 PN250/1500 lbs

Order codes for mag. level gauge type ITA-12 & ITA-12.0 PN250/1500 lbs

Code	Description
	9.1 Drain flange with concentric reducer (X-ray testing)
0	without
1	DN 15 PN 250
2	DN 25 PN 250
3	DN 32 PN 250
4	DN 40 PN 250
A	1/2" ANSI 1500 lbs
B	3/4" ANSI 1500 lbs
C	1" ANSI 1500 lbs
D	1 1/4" ANSI 1500 lbs
E	1 1/2" ANSI 1500 lbs
	9.2 Surface open drain flange
0	without
B	Standard-Surface RF
D	Surface Form E Rz=16
E	Surface RFSF (smooth finished)
G	Surface groove large
K	Surface tongue-large
L	Surface RTJ (ANSI)
	10. Float pipe top end finish
1	End cap
2	Flange with blind flange DN 50 PN 250
A	Flange with blind flange 2" ANSI 1500 lbs
	10.1 Surface float pipe top end finish flange (only DN50 or 2")
0	without
B	Standard-Surface RF
D	Surface Form E Rz=16
E	Surface RFSF (smooth finished)
G	Surface groove large
K	Surface tongue-large
L	Surface RTJ (ANSI)
	10.2 Bolts & nuts float pipe top end finish flange
0	without
61	M24 x 140 mm; mat. steel zinced; Flange DN 50 PN 250
62	M24 x 140 mm; mat. SS 1.4301; Flange DN 50 PN 250
6X	M24 x 140 mm; mat. steel zinced A193B7 / A1942H; Flange 2" ANSI 1500 lbs
FA	7/8" x 150 mm; RF; mat. A193B7/A1942H zinced steel; flange 2" ANSI 1500 lbs, ANSI B16.5
FB	7/8" x 150 mm; RF; mat. A193B8 / A1948M SS; flange 2" ANSI 1500 lbs, ANSI B16.5
FC	7/8" x 160 mm; RTJ; mat. A193B7/A1942H zinced steel, flange 2" ANSI 1500 lbs; ANSI B16.5
FD	7/8" x 150 mm; RTJ; mat. A193B8 / A1948M SS; flange 2" ANSI 1500 lbs, ANSI B16.5
FT	7/8" x 160 mm; RF; mat. A193B8 / A1948M PTFE-coated; flange 2" ANSI 1500 lbs, ANSI B16.5
FV	7/8" x 160 mm; RTJ; mat. A193B8/A1948M PTFE-coated, flange 2" ANSI 1500 lbs; ANSI B16.5

Mag. Level Gauge
ITA-12 & ITA-12.0 PN250/1500 lbs

Order codes for mag. level gauge type ITA-12 & ITA-12.0 PN250/1500 lbs

Code	Description
	11. Vent plug at top end
0	without
1	Vent plug G1/2" with soft iron gasket
2	Vent plug 1/2" NPT
3	Vent plug 3/4" NPT
4	Vent plug 1" NPT
	11.1 Vent flange welded to end cap instead of vent plug
0	without
1	Flange DN 15 PN 250 (socket weld construction to endcap)
2	Flange DN 25 PN 250 (socket weld construction to endcap)
3	Flange DN 32 PN 250 (socket weld construction to endcap)
4	Flange DN 40 PN 250 (socket weld construction to endcap)
A	Flange 1/2" ANSI 1500 lbs (socket weld construction to endcap)
B	Flange 3/4" ANSI 1500 lbs (socket weld construction to endcap)
C	Flange 1" ANSI 1500 lbs (socket weld construction to endcap)
D	Flange 1 1/4" ANSI 1500 lbs (socket weld construction to endcap)
E	Flange 1 1/2" ANSI 1500 lbs (socket weld construction to endcap)
	11.2 Vent flange with concentric reducer (X-ray testing)
0	without
1	DN 15 PN 250
2	DN 25 PN 250
3	DN 32 PN 250
4	DN 40 PN 250
A	1/2" ANSI 1500 lbs
B	3/4" ANSI 1500 lbs
C	1" ANSI 1500 lbs
D	1 1/4" ANSI 1500 lbs
E	1 1/2" ANSI 1500 lbs
	11.3 Surface vent flange welded to end cap (only DN50 or 2")
0	without
B	Standard-Surface RF
D	Surface Form E Rz=16
E	Surface RFSF (smooth finished)
G	Surface groove large
K	Surface tongue-large
L	Surface RTJ (ANSI)

Mag. Level Gauge
ITA-12 & ITA-12.0 PN250/1500 lbs

Order codes for mag. level gauge type ITA-12 & ITA-12.0 PN250/1500 lbs

Code	Description
	12. Counter flanges
0	without
1	DN 15 PN 250
2	DN 25 PN 250
3	DN 32 PN 250
4	DN 40 PN 250
5	DN 50 PN 250
A	1/2" ANSI 1500 lbs
B	3/4" ANSI 1500 lbs
C	1" ANSI 1500 lbs
D	1 1/4" ANSI 1500 lbs
E	1 1/2" ANSI 1500 lbs
F	2" ANSI 1500 lbs
	12.1 Surface counter flanges
0	without
B	Standard-Surface RF
D	Surface Form E Rz=16
E	Surface RFSF (smooth finished)
G	Surface groove large
K	Surface tongue-large
L	Surface RTJ (ANSI)
	12.2 Bolts & Nuts counter flanges
0	without
61	M24 x 140 mm; mat. steel zinced; Flange DN 50 PN 250
62	M24 x 140 mm; mat. SS 1.4301; Flange DN 50 PN 250
6X	M24 x 140 mm; mat. steel zinced A193B7 / A1942H; Flange 2" ANSI 1500 lbs
FA	7/8" x 150 mm; RF; mat. A193B7/A1942H zinced steel; flange 2" ANSI 1500 lbs, ANSI B16.5
FB	7/8" x 150 mm; RF; mat. A193B8 / A1948M SS; flange 2" ANSI 1500 lbs, ANSI B16.5
FC	7/8" x 160 mm; RTJ; mat. A193B7/A1942H zinced steel, flange 2" ANSI 1500 lbs; ANSI B16.5
FD	7/8" x 150 mm; RTJ; mat. A193B8 / A1948M SS; flange 2" ANSI 1500 lbs, ANSI B16.5
FT	7/8" x 160 mm; RF; mat. A193B8 / A1948M PTFE-coated; flange 2" ANSI 1500 lbs, ANSI B16.5
FV	7/8" x 160 mm; RTJ; mat. A193B8/A1948M PTFE-coated, flange 2" ANSI 1500 lbs; ANSI B16.5
	13. Additional bracket welded to the float pipe
0	without
H	Bracket

Mag. Level Gauge
ITA-12 & ITA-12.0 PN250/1500 lbs

Order codes for mag. Level Gauges type: ITA-12 & ITA-12.0 PN250/1500 lbs

	Description						
Floats							
Code	**Pressure [bar]**	**Material**	**Diameter [mm]**	**Length [mm]**	**min. Density [kg/dm³]**	**vented [Y/N]**	**Notes**
12V324K1	250	316L	46	265	0,7736	Y	
12T324K3	250	Titanium	46	265	0,5526	Y	only with 316SS or Aluminium indication rail; do not use for hydrogen or alcohol compound
12T224K1	250	Titanium	42	265	1,0396	N	do not use for hydrogen or alcohol compound
12T224K3	250	Titanium	42	265	0,9659	N	only with 316SS or Aluminium indication rail; do not use for hydrogen or alcohol compound
12T230K1	250	Titanium	42	325	0,9250	N	do not use for hydrogen or alcohol compound
12T230K3	250	Titanium	42	325	0,7978	N	only with 316SS or Aluminium indication rail; do not use for hydrogen or alcohol compound
12T240K1	250	Titanium	42	425	0,8304	N	do not use for hydrogen or alcohol compound
12T240K3	250	Titanium	42	425	0,7394	N	only with 316SS or Aluminium indication rail; do not use for hydrogen or alcohol compound
12T250K1	250	Titanium	42	525	0,7763	N	do not use for hydrogen or alcohol compound
12T250K3	250	Titanium	42	525	0,7055	N	only with 316SS or Aluminium indication rail; do not use for hydrogen or alcohol compound
12T124K3	250	Titanium	38	265	0,8944	N	only with 316SS or Aluminium indication rail; do not use for hydrogen or alcohol compound
12T130K3	250	Titanium	38	325	0,8281	N	only with 316SS or Aluminium indication rail; do not use for hydrogen or alcohol compound

NOTE: The prices for the single parts in the above price list are only meant for the composition of a complete level gauge.
For spare parts prices, please refer to the chapter "Spare parts".
For additional accessories please refer to the chapters "Special equipment" and "Electrical accessories and Switches"

3.21.3 Order code scheme for ITA-12 & ITA-12.0

1. Type of level gauge ITA-12 or ITA-12.0	2. C to C distance in mm [or inches]	3. Design	4. C to C distance > 5000 mm	5. Process connection [side/side]	5.1 Surface side flanges	6. Side studs welded with T-pieces for 100 % X-ray-testing	7. Float removal flange	7.1 Surface float removal flange	7.2 Bolts & nuts float removal flange	8. Drain plug	9. Additional drain flange, open
ITA-12											
ITA-12.0											

9.1 Drain flange with concentric reducer (X-ray testing)	9.2 Surface open drain flange	10. Float pipe top end finish	10.1 Surface top end finish flange	10.2 Bolts and nuts rop end finish flange	11. Vent plug at top end	11.1 Vent flange welded to end cap instead of vent plug	11.2 Vent flange with concentric reducer (X-ray testing)	11.3 Surface vent flange welded to end cap	12. Counter flanges	12.1 Surface counter flanges	12.2 Bolts & nuts counter flanges	13. Additional bracket welded to the float pipe	14. Float

3.22.1 ITA-13

Characteristics: PN320 / Float pipe and flange material: 1.4404

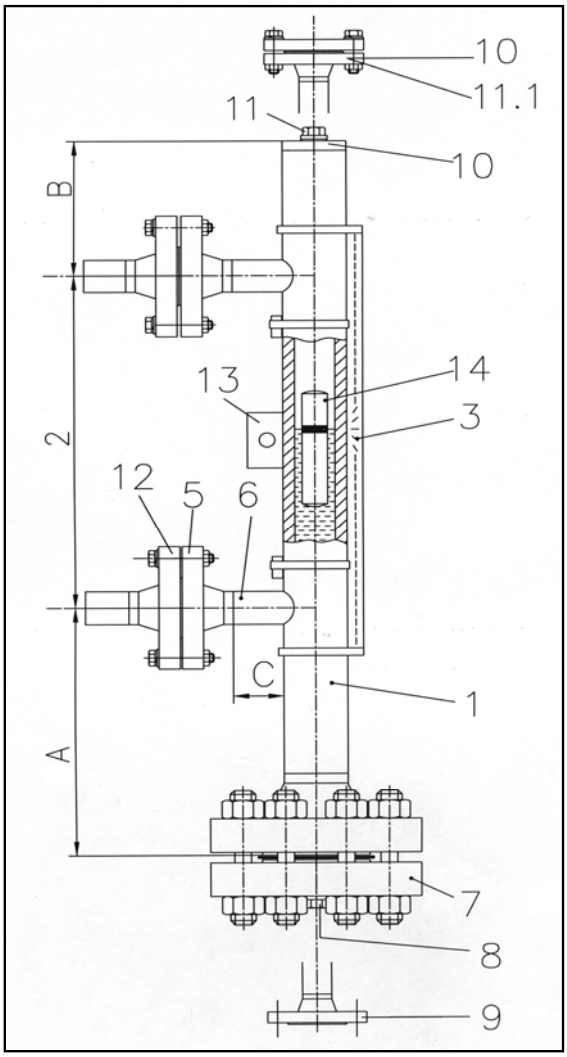

Key:

1 Float pipe welded, dimensions 60,3 x 8,7 mm
2 c to c distance
3 Design (indication rail)
5 Process connection side/side
6 Side studs welded with T pieces for 100 % X-ray testing
7 Float removal flange
8 Drain plug
9 Additional drain flange, open
10 Float pipe top end finish
11 Vent plug
12 Counter flanges
13 Additional bracket
14 Float pipe seamless
15 Float

Technical specifications magnetic level gauge type ITA-13

Principle:	Communicating tubes with magnetic float
Mounting position:	vertical
Measuring range:	**max. 5000 mm (one-part)** > 5000 mm 2- or multipart
Pipe diameter:	**60,3 x 8,7 mm seamless,** **welding stud** or butt-weld connection wie T-pieces
Process connection:	to specify: **Flanges DN15…50 (1/2"…2" 2500#),** **Welding or threaded stud**
Drain/Vent connections:	**Plug 1/2"NPT**
Pipe material:	**1.4404**; 1.4435; 1.4539; Hastelloy C4 (2.4610); Inconel 625 (2.4856); Inconel 825 (2.4858); Titan (3.7035) (other materials on request)
Flange material:	same as pipe material
Float material:	**Titanium*** **
Operation temperature:	-50..+400 °C
Operation pressure:	max. 320 bar
Operation density:	min. 0,5032 kg/dm³ (vented float) min. 0,7582 kg/dm³ (sealed float)
Viscosity:	max. 5000 mPa s
Bolts & Nuts:	**CS** SS
Gasket	**Spiral wound, 316Ti** **Cam profile, 316Ti**
Indication rail:	**Makrolon up to 120 °C** Aluminium up to 400 °C 1.4301 up to 400 °C
Float types:	Cylindical, sealed type (Titanium) Length: **-270 mm** -330 mm -430 mm
Standard dimensions:	-A = 240 mm* -B = 130 mm** - C = 100 mm

Base equipment printed in bold letters!
***depending on density enlarge the scale A**
**** for end cap B=170 mm for WN**
*****not for use for hydrogen or alcohol-compounds**

3.22.2 ITA-13.0

Characteristics: PN320 / Float pipe: 1.4404 and flanges : CS

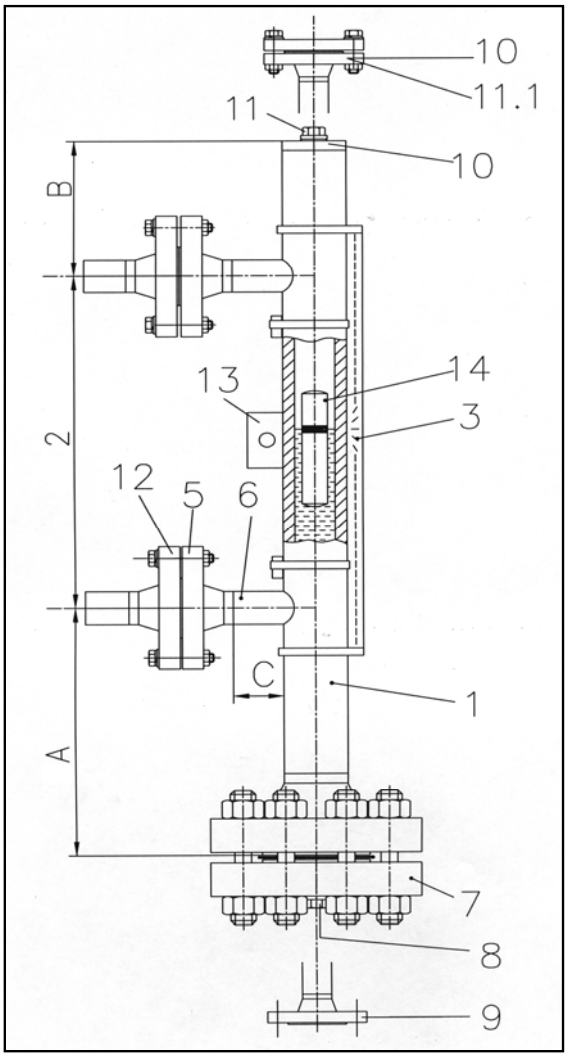

Key:

1 Float pipe welded, dimensions 60,3 x 8,7 mm
2 c to c distance
3 Design (indication rail)
5 Process connection side/side
6 Side studs welded with T pieces for 100 % X-ray testing
7 Float removal flange
8 Drain plug
9 Additional drain flange, open
10 Float pipe top end finish
11 Vent plug
12 Counter flanges
13 Additional bracket
14 Float pipe seamless
15 Float

Technical specifications magnetic level gauge type ITA-13.0

Principle:	Communicating tubes with magnetic float
Mounting position:	vertical
Measuring range:	**max. 5000 mm (one-part)** > 5000 mm 2- or multipart
Pipe diameter:	**60,3 x 8,7 mm seamless,** **welding stud** or butt-weld connection wie T-pieces
Process connection:	to specify: **Flanges DN15…50 (1/2"…2" 2500#),** **Welding or threaded stud**
Drain/Vent connections:	**Plug 1/2"NPT**
Pipe material:	**1.4404**; 1.4435; 1.4539; Hastelloy C4 (2.4610); Inconel 625 (2.4856); Inconel 825 (2.4858); Titan (3.7035) (other materials on request)
Flange material:	**CS**
Float material:	**Titanium*****
Operation temperature:	-50..+400 °C
Operation pressure:	max. 320 bar
Operation density:	min. 0,5032 kg/dm³ (vented float) min. 0,7582 kg/dm³ (sealed float)
Viscosity:	max. 5000 mPa s
Bolts & Nuts:	**CS** SS
Gasket	**Spiral wound, 316Ti** **Cam profile, 316Ti**
Indication rail:	**Makrolon up to 120 °C** Aluminium up to 400 °C 1.4301 up to 400 °C
Float types:	Cylindical, sealed type (Titanium) Length: **-270 mm** -330 mm -430 mm
Standard dimensions:	-A = 240 mm* -B = 130 mm** - C = 100 mm

Base equipment printed in bold letters!
***depending on density enlarge the scale A**
**** for end cap B=170 mm for WN**
*****not for use for hydrogen or alcohol-compounds**

3.22.3 Order codes ITA-13 & ITA-13.0

Mag. Level Gauge
ITA-13 & ITA-13.0 PN320/2500 lbs

Order codes for mag. level gauge type ITA-13 & ITA-13.0 PN320/2500 lbs

Code	Description
ITA-13	**1. Float pipe seamless Dimensions 60,3 x 8,7 mm**
	2. C to C distance
L	C to C distance in mm
	3. Design
0	without indication rail each 100 mm
1	Indication rail material: Makrolon max. 120 °C; each 100 mm
2	Indication rail material: Aluminium max. 400 °C, pro 100 mm
3	Indication rail material: 1.4401 max. 400 °C, pro 100 mm
	4. C to C distance < 5000 mm
A	< 5000 mm - without flange connection; DN 50 PN 320
B	> 5000 mm - with flange connection; DN 50 PN 320
	5. Process connections side/side
Y	Welding connections (please specify)
Z	Threaded connections (please specify)
0	Flanges DN 15 PN 320
1	Flanges DN 25 PN 320
2	Flanges DN 32 PN 320
3	Flanges DN 40 PN 320
4	Flanges DN 50 PN 320
A	Flanges 1/2" ANSI 2500 lbs
B	Flanges 3/4" ANSI 2500 lbs
C	Flanges 1" ANSI 2500 lbs
D	Flanges 1 1/4" ANSI 2500 lbs
E	Flanges 1 1/2" ANSI 2500 lbs
F	Flanges 2" ANSI 2500 lbs
	5.1 Surface side flanges
0	without
C	Standard-Surface RF
F	Surface Form E Rz=16
G	Surface RFSF (smooth finished)
H	Surface groove large
I	Surface tongue-large
J	Surface RTJ (ANSI)
	6. Side studs welded with T-pieces for 100 % X-ray testing
0	without
T	T-pieces

Mag. Level Gauge
ITA-13 & ITA-13.0 PN320/2500 lbs

Order codes for mag. level gauge type ITA-13 & ITA-13.0 PN320/2500 lbs

Code	Description
	7. Float removal flange (bottom side)
1	Flange DN 50 PN 320 incl. blind flange
A	Flange 2" ANSI 2500 lbs incl. blind flange
2	Flange DN 50 PN 320 prepared for shut off valve on side
B	Flange 2" ANSI 2500 lbs prepared for shut off valve on side
	7.1 Surface float removal flange (bottom side)
C	Standard-Surface RF
F	Surface Form E Rz=16
G	Surface RFSF (smooth finished)
H	Surface groove large
I	Surface tongue-large
J	Surface RTJ (ANSI)
	7.2 Bolts & Nuts float removal flange
0	without (Float removal flange (bottom side) = end cap)
61	M24 x 150 mm; mat. steel zinced; Flange DN 50 PN 32C
62	M24 x 150 mm; mat. SS 1.4301; Flange DN 50 PN 320
6X	M24 x 150 mm; PTFE coated; Flange DN 50 PN 320; DIN 251C
FA	7/8" x 150 mm; RF; mat. A193B7/A1942H zinced steel; flange 2" ANSI 1500 lbs, ANSI B16.5
FB	7/8" x 150 mm; RF; mat. A193B8 / A1948M SS; flange 2" ANSI 1500 lbs, ANSI B16.5
FC	7/8" x 160 mm; RTJ; mat. A193B7/A1942H zinced steel, flange 2" ANSI 1500 lbs; ANSI B16.5
FD	7/8" x 150 mm; RTJ; mat. A193B8 / A1948M SS; flange 2" ANSI 1500 lbs, ANSI B16.5
FT	7/8" x 160 mm; RF; mat. A193B8 / A1948M PTFE-coated; flange 2" ANSI 1500 lbs, ANSI B16.5
FV	7/8" x 160 mm; RTJ; mat. A193B8/A1948M PTFE-coated, flange 2" ANSI 1500 lbs; ANSI B16.5
	8. Drain plug
0	without
1	Drain plug G 1/2" with soft iron gasket
2	Drain plug 1/2" NPT
3	Drain plug 3/4" NPT
4	Drain plug 1" NPT
	9. Additional drain flange, open
0	without
1	Drain stud with flange DN 15 PN 320
2	Drain stud with flange DN 25 PN 320
3	Drain stud with flange DN 32 PN 320
4	Drain stud with flange DN 40 PN 320
A	Drain stud with flange 1/2" ANSI 2500 lbs
B	Drain stud with flange 3/4" ANSI 2500 lbs
C	Drain stud with flange 1" ANSI 2500 lbs
D	Drain stud with flange 1 1/4" ANSI 2500 lbs
E	Drain stud with flange 1 1/2" ANSI 2500 lbs

Mag. Level Gauge
ITA-13 & ITA-13.0 PN320/2500 lbs

Order codes for mag. level gauge type ITA-13 & ITA-13.0 PN320/2500 lbs

Code	Description
	9.1 Drain flange with concentric reducer (X-ray testing)
0	without
1	DN 15 PN 320
2	DN 25 PN 320
3	DN 32 PN 320
4	DN 40 PN 320
A	1/2" ANSI 2500 lbs
B	3/4" ANSI 2500 lbs
C	1" ANSI 2500 lbs
D	1 1/4" ANSI 2500 lbs
E	1 1/2" ANSI 2500 lbs
	9.2 Surface open drain flange
0	without
C	Standard-Surface RF
F	Surface Form E Rz=16
G	Surface RFSF (smooth finished)
H	Surface groove large
I	Surface tongue-large
J	Surface RTJ (ANSI)
	10. Float pipe top end finish
0	End cap
1	Flange with blind flange DN 50 PN 320
A	Flange with blind flange 2" ANSI 2500 lbs
	10.1 Surface float pipe top end finish flange (only DN50 or 2")
0	without
C	Standard-Surface RF
F	Surface Form E Rz=16
G	Surface RFSF (smooth finished)
H	Surface groove large
I	Surface tongue-large
J	Surface RTJ (ANSI)
	10.2 Bolts & nuts float pipe top end finish flange
0	without
61	M24 x 150 mm; mat. steel zinced; Flange DN 50 PN 32C
62	M24 x 150 mm; mat. SS 1.4301; Flange DN 50 PN 320
6X	M24 x 150 mm; PTFE coated; Flange DN 50 PN 320; DIN 251C
FA	7/8" x 150 mm; RF; mat. A193B7/A1942H zinced steel; flange 2" ANSI 1500 lbs, ANSI B16.5
FB	7/8" x 150 mm; RF; mat. A193B8 / A1948M SS; flange 2" ANSI 1500 lbs, ANSI B16.5
FC	7/8" x 160 mm; RTJ; mat. A193B7/A1942H zinced steel, flange 2" ANSI 1500 lbs; ANSI B16.5
FD	7/8" x 150 mm; RTJ; mat. A193B8 / A1948M SS; flange 2" ANSI 1500 lbs, ANSI B16.5
FT	7/8" x 160 mm; RF; mat. A193B8 / A1948M PTFE-coated; flange 2" ANSI 1500 lbs, ANSI B16.5
FV	7/8" x 160 mm; RTJ; mat. A193B8/A1948M PTFE-coated, flange 2" ANSI 1500 lbs; ANSI B16.5

Mag. Level Gauge
ITA-13 & ITA-13.0 PN320/2500 lbs

Order codes for mag. level gauge type ITA-13 & ITA-13.0 PN320/2500 lbs

Code	Description
	11. Vent plug at top end
0	without
1	Vent plug G1/2" with soft iron gasket
2	Vent plug 1/2" NPT
3	Vent plug 3/4" NPT
4	Vent plug 1" NPT
	11.1 Vent flange welded to end cap instead of vent plug
0	without
1	Flange DN 15 PN 320 (socket weld construction to endcap)
2	Flange DN 25 PN 320 (socket weld construction to endcap)
3	Flange DN 32 PN 320 (socket weld construction to endcap)
4	Flange DN 40 PN 320 (socket weld construction to endcap)
A	Flange 1/2" ANSI 2500 lbs (socket weld construction to endcap)
B	Flange 3/4" ANSI 2500 lbs (socket weld construction to endcap)
C	Flange 1" ANSI 2500 lbs (socket weld construction to endcap)
D	Flange 1 1/4" ANSI 2500 lbs (socket weld construction to endcap)
E	Flange 1 1/2" ANSI 2500 lbs (socket weld construction to endcap)
	11.2 Vent flange with concentric reducer (X-ray testing)
0	without
1	DN 15 PN 320
2	DN 25 PN 320
3	DN 32 PN 320
4	DN 40 PN 320
A	1/2" ANSI 2500 lbs
B	3/4" ANSI 2500 lbs
C	1" ANSI 2500 lbs
D	1 1/4" ANSI 2500 lbs
E	1 1/2" ANSI 2500 lbs
	11.3 Surface vent flange welded to end cap (only DN50 or 2")
0	without
C	Standard-Surface RF
F	Surface Form E Rz=16
G	Surface RFSF (smooth finished)
H	Surface groove large
I	Surface tongue-large
J	Surface RTJ (ANSI)
	12. Counter flanges
0	without
1	DN 15 PN 320
2	DN 25 PN 320
3	DN 32 PN 320
4	DN 40 PN 320
5	DN 50 PN 320

Mag. Level Gauge
ITA-13 & ITA-13.0 PN320/2500 lbs

Order codes for mag. level gauge type ITA-13 & ITA-13.0 PN320/2500 lbs

Code	Description
	12. Counter flanges (Continuation
A	1/2" ANSI 2500 lbs
B	3/4" ANSI 2500 lbs
C	1" ANSI 2500 lbs
D	1 1/4" ANSI 2500 lbs
E	1 1/2" ANSI 2500 lbs
F	2" ANSI 2500 lbs
	12.1 Surface counter flanges
0	without
C	Standard-Surface RF
F	Surface Form E Rz=16
G	Surface RFSF (smooth finished)
H	Surface groove large
I	Surface tongue-large
J	Surface RTJ (ANSI)
	12.2 Bolts & Nuts counter flanges
0	without
61	M24 x 150 mm; mat. steel zinced; Flange DN 50 PN 32C
62	M24 x 150 mm; mat. SS 1.4301; Flange DN 50 PN 320
6X	M24 x 150 mm; PTFE coated; Flange DN 50 PN 320; DIN 251C
FA	7/8" x 150 mm; RF; mat. A193B7/A1942H zinced steel; flange 2" ANSI 1500 lbs, ANSI B16.5
FB	7/8" x 150 mm; RF; mat. A193B8 / A1948M SS; flange 2" ANSI 1500 lbs, ANSI B16.5
FC	7/8" x 160 mm; RTJ; mat. A193B7/A1942H zinced steel, flange 2" ANSI 1500 lbs; ANSI B16.5
FD	7/8" x 150 mm; RTJ; mat. A193B8 / A1948M SS; flange 2" ANSI 1500 lbs, ANSI B16.5
FT	7/8" x 160 mm; RF; mat. A193B8 / A1948M PTFE-coated; flange 2" ANSI 1500 lbs, ANSI B16.5
FV	7/8" x 160 mm; RTJ; mat. A193B8/A1948M PTFE-coated, flange 2" ANSI 1500 lbs; ANSI B16.5
	13. Additional bracket welded to the float pipe
0	without
H	Bracket

Mag. Level Gauge
ITA-13 & ITA-13.0 PN320/2500 lbs
Float pipe: 1.4571 flange: 1.4404

Order codes for mag. Level Gauges type: ITA-13.0 PN320/2500 lbs

	Description						
Floats							
Code	**Pressure [bar]**	**Material**	**Diameter [mm]**	**Length [mm]**	**min. Density [kg/dm³]**	**vented [Y/N]**	**Notes**
13V330K3	320	316L	38	325	0,7269	Y	only with 316SS or Aluminium indication ra
13T324K3	320	Titanium	38	265	0,5366	Y	only with 316SS or Aluminium indication rail; do not use for hydrogen and alcohol compounds
13T024K3	320	Titanium	38	265	0,8985	N	only with 316SS or Aluminium indication rail; do not use for hydrogen and alcohol compounds
13T330K3	320	Titanium	38	325	0,5032	Y	only with 316SS or Aluminium indication rail; do not use for hydrogen and alcohol compounds
13T040K3	320	Titanium	38	425	0,7582	N	only with 316SS or Aluminium indication rail; do not use for hydrogen and alcohol compounds
13T050K3	320	Titanium	38	525		N	only with 316SS or Aluminium indication rail; do not use for hydrogen and alcohol compounds

For additional accessories please refer to the chapters "Special equipment" and "Electrical accessories and Switches"

3.22.3 Order code scheme for ITA-13 & ITA-13.0

1. Type of level gauge ITA-13 or ITA-13.0	2. C to C distance in mm [or inches]	3. Design	4. C to C distance > 5000 mm	5. Process connection [side/side]	5.1 Surface side flanges	6. Side studs welded with T-pieces for 100 % X-ray-testing	7. Float removal flange	7.1 Surface float removal flange	7.2 Bolts & nuts float removal flange	8. Drain plug	9. Additional drain flange, open
ITA-13											
ITA-13.0											

9.1 Drain flange with concentric reducer (X-ray testing)	9.2 Surface open drain flange	10. Float pipe top end finish	10.1 Surface top end finish flange	10.2 Bolts and nuts rop end finish flange	11. Vent plug at top end	11.1 Vent flange welded to end cap instead of vent plug	11.2 Vent flange with concentric reducer (X-ray testing)	11.3 Surface vent flange welded to end cap	12. Counter flanges	12.1 Surface counter flanges	12.2 Bolts & nuts counter flanges	13. Additional bracket welded to the float pipe	14. Float

4. Equipment

4.1 ITA-3 Cryo

If Armaflex is used for insulation (t=9 mm) the material for the indication rail will be aluminium. As standard for the level gauge in Cryo-design we use a float chamber 60,3x2 mm with a float from titanium (50,8x240 mm length) down to a liquid density of 0,6 kg/dm³.
For temperatures below –40°C the Armaflex insulation is double ply, the upper layer only up to the indication rail.

The customer should also insulate the process flanges.
For vaporizing media (for example ammonia) w recommend to use floats with 4 distance sleeves (In this case the floats are smaller than standard floats). This construction prevents catapulting the float upwards (this would cause switch failures) if gas evolution appears.
For temperatures down to –20°C we are using a float chamber 60,3x2 mm and a titanium float 45x400 mm, for temperatures below –20°C we are using a float chamber 64x2mm and a titanium float 50,8x500 mm.
In every case we use flanges DN50 as drain connections (weld neck and blind flanges with groove and tongue). When the dimension of the float chamber is 64x2 mm, it is necessary to modify the weld neck flange.
On request by the customer we make use of small hole (throttling part) to transmit the liquid level to the float chamber. It stabilizes

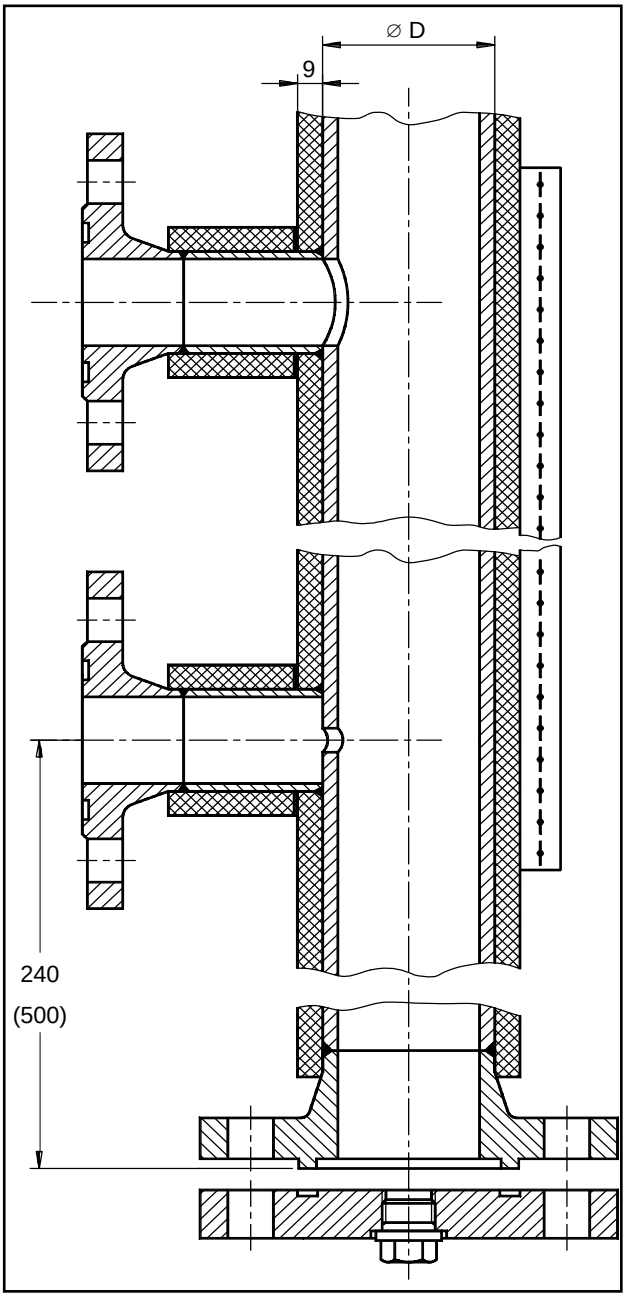

throttling part dependence on the temperature:
∅ 4 mm for T -20°C
∅ 2 mm for T < -20°C

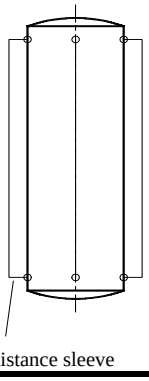

4.2 Armaflex®-Insulation

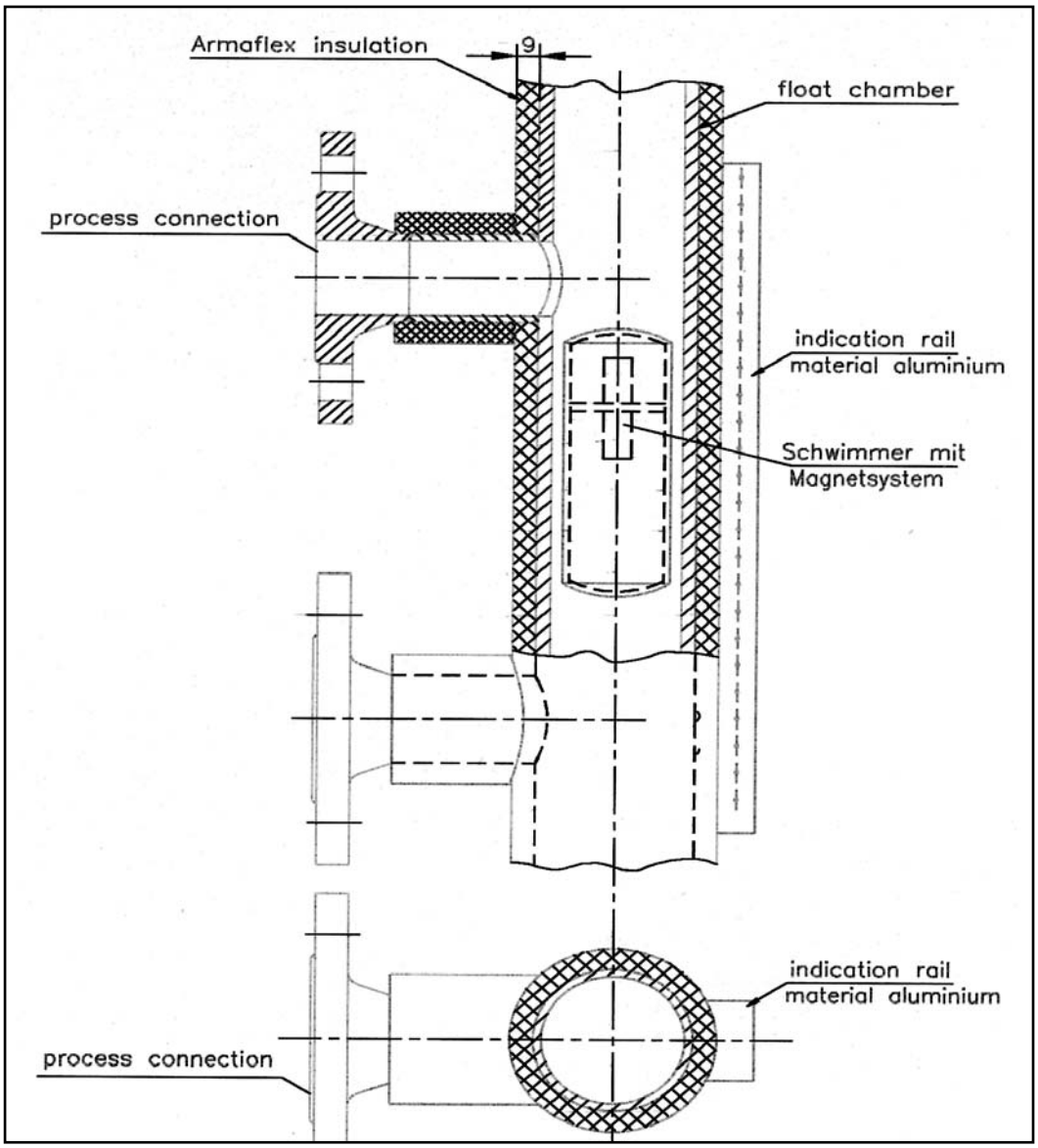

4.3 Heat insulation

Isolation and sealing material:
made of e-glassyarns

Technical data:

Composition in %:	: 53 % SiO_2, 16 % CaO, 13 % Al_2O_3, 7 % B_2O_3, 4 % MgO, 1 % Na_2 + K_2O
Portion organic substance	: < 1 % (combust at first heating-up)
Density (g/cm³)	: 2,5
Temperature resistance	: 500°C/550°C
Degree of moisture	: 1%
Annealing loss	: 0,6%
Shrinking	: 500°C = 0 %
Resistance against	: Oil, grease, water, temporary steam and numerous organic acids/solvents. Good resistance against sudden heat waves. Good thermal electrical and acoustical insulation resistance: Toxicologically harmless No handling abligations

4.4 Technical data Switches

1. General table

Switch	1690	1690ATEX	LMS-A	LMS-A-EExd	MS09K	MS10 EExd
Part-no.	641.6502.380LI	610.045N1001	----	----	----	----
Housing	synthetic	synthetic	Al Si 12	Al Si 12	synthetic	Aluminium
Contact Function	bistable change-over contact	bistable change-over contact	bistable change-over contact**	bistable change-over contact	break-or make-contact, change-over contact	break-or make-contact, change-over contact
Dimensions	20x15x80	20x15x80	65x65x40	∅138x80	110x75x50	120x120x110
Breaking on rupturing capacity	230 VAC	230 VAC	12..250 VAC	220 VAC	250 VAC	250 VAC
	0,8 A	0,4 A	1,5 A	1,5 A	10 A	10 A
	60 VA	30 VA	80 VA	80 VA	----	----
Protective System	IP65	IP65	IP65 DIN 40050	IP65 DIN 40050	IP65 DIN 40050	IP65 DIN 40050
Option	IP67 DIN40050	IP67 DIN40050	----	----	----	----
Switch-hysteresis	15 mm	15 mm	8…12 mm	8…12 mm	----	----
Medium temperature	max. 130 °C	max. 130 °C	max. 200 °C*	max. 200 °C	max. 100 °C	max. 200 °C
EEx-protection	----	EEx m II CT6	----	EEx d II CT6	----	EEx d II CT6
Connection	----	----	PG7,5	4 connection (3/4" NPT)	PG11	3/4" NPT

Electric connection with 3-channel plug and earth.
For all switches the international standard EN 60529 is valid.
*Type LMS-A in heat protection version can stand a max. temp. of 400 °C
**available with gold contact

2. NI Ex NJ switch

Inherent safety EEx-switch, on request with define error message.

Contact-transmitter	Supply voltage:	8 V DC
	Max temperature:	60 °C
	Cable connection at housing:	PG11
Section switch appliance	Supply voltage:	220 V + 15 % (45…60 Hz)
	Power consumption:	appr. 1,5 V
	Open circuit voltage:	8 V DC
	Allowed charge:	4 A/250 V/250 VA
	Allowed temperature:	-20…+60°C

3. Switch diagrams

Types: 1690, 1690ATEX, LMS-A, LMS-A-EExd, MS09K and MS10 EExd:

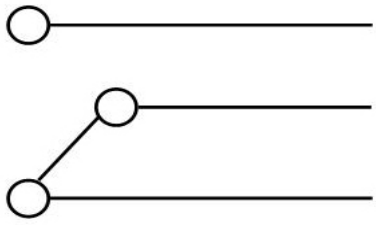

bistable change-over contact

Switch LMS-A

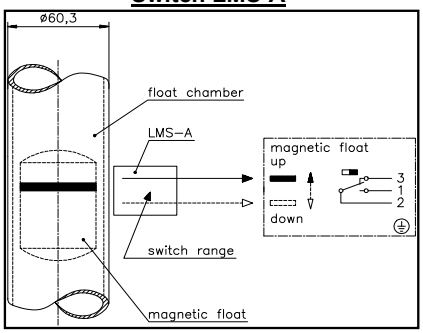

Switch LMS-AH

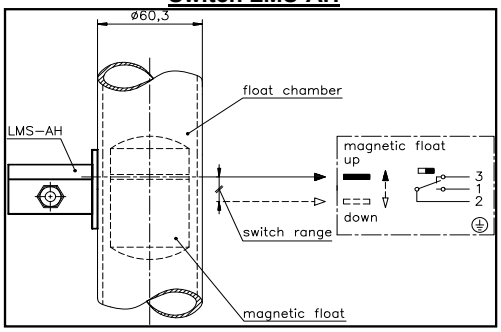

Switch 1690 / 1690ATEX

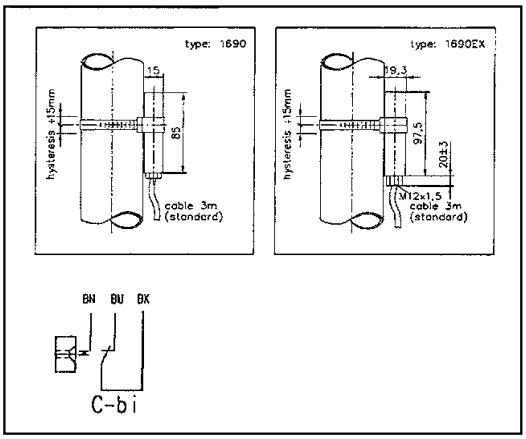

Switch MS09K

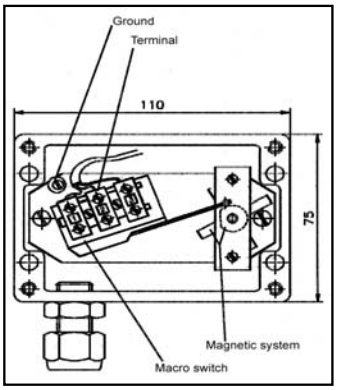

Switch MS10 EExd

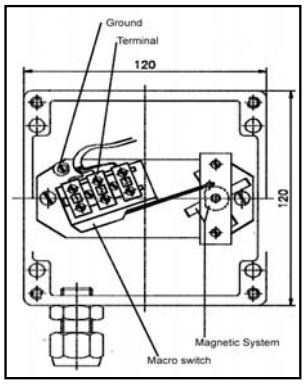

Switch LMS-A-EExd

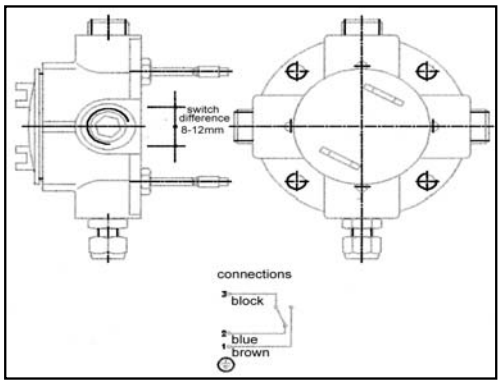

Switch Ni Ex NJ

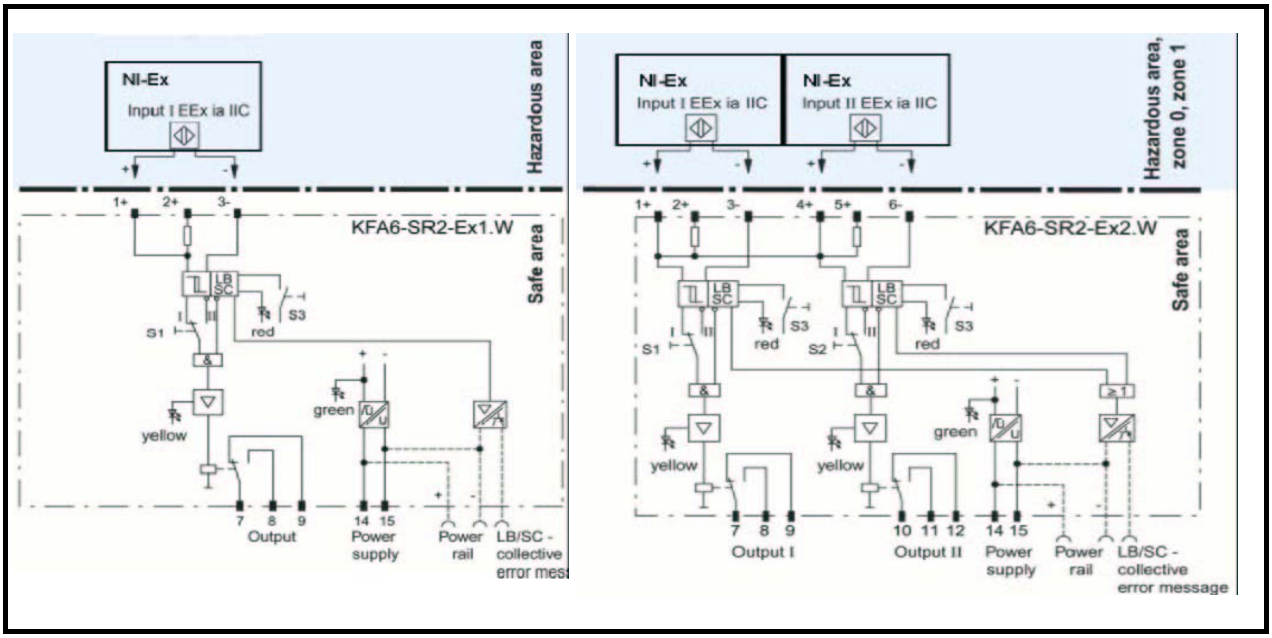

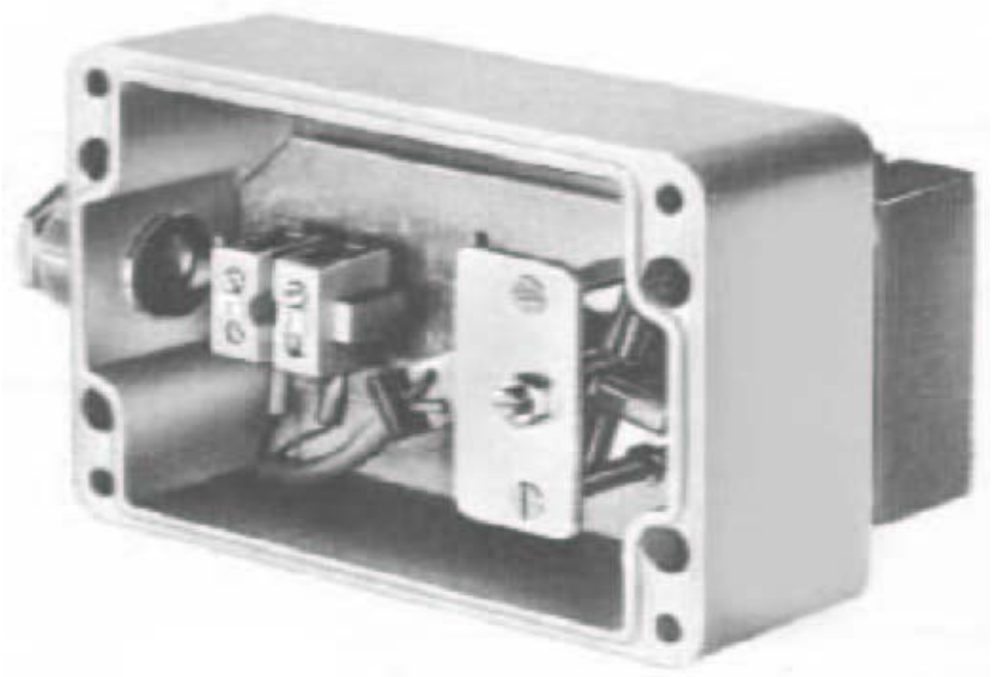

Switch NI-Ex-NJ

4.5 Contact NJ-EX

The contact NJ-EX is an inductivbe contact NJ 1.5-6.5 N, kontex system, protective system EEx ia IIC T6.

Function:

Actuation is provide by the magnet installed in the float. The follow magnet system of the contact maker moves the switching disk, which serves for releasing the contact between two small inductances of the slotted initiator and thereby varies the attenuation of the resonant circuit.

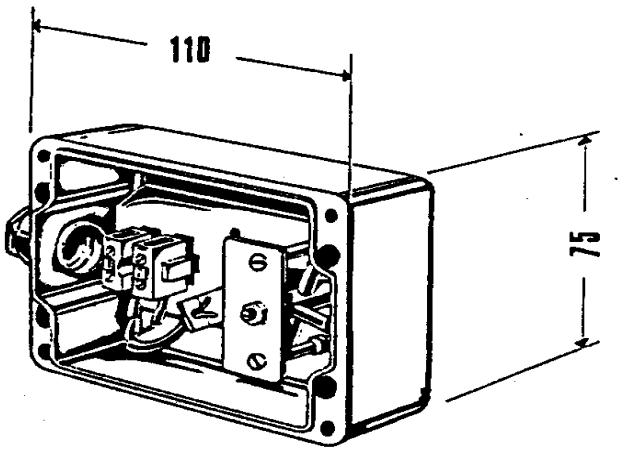

Technical data:

Electrical connection:	8 V DC
Temp./ambient temp.	60 °C
Cable connections:	M20x1,5

Swich relay:

KFA6-SR2-Ex1.W:	for 1 inductive contact EEx ia IIC
KFA6-SR2-Ex2.W:	for 2 inductive contacts EEx ia IIC

4.6 Indication rails

Armaflex-insulation and heating tape ITA

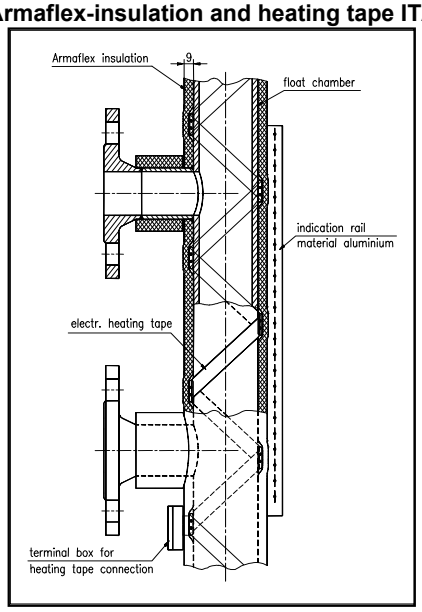

Indication rail with scale for ITA

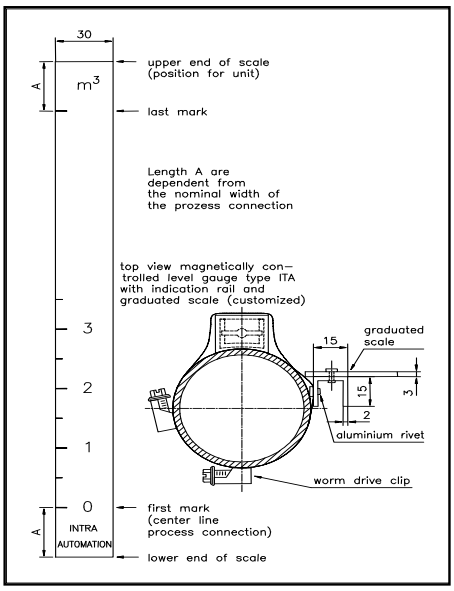

Indication rails:

Makrolon

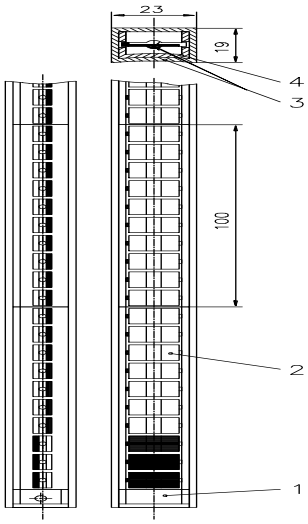

1. Sealing cap
2. Indication lamina with magnet
3. Rectangualr profile
4. U-profile

Aluminium

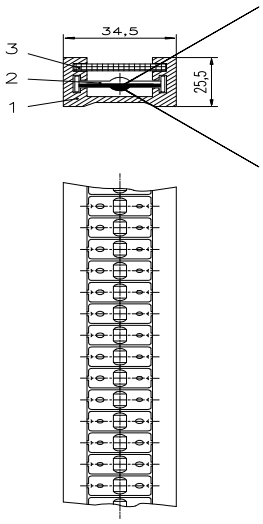

1. U-profile
2. Indication lamina with magnet
3. Transparent covering
4. Hermetically sealed

316SS

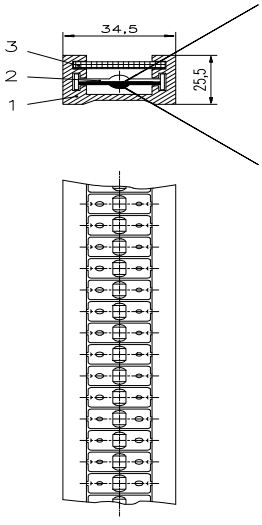

1. U-profile
2. Indication lamina with magnet
3. Transparent covering
4. Hermetically sealed

4.7 Reed-Chain

Electrical level measurement transducers which use the displacement principle have to be recalibrated each time the fluid density is changed.

The price of a magnetically controlled level indicator with integral electrical measurement transducer is considerably lower than level measurement tranducers.

The reed chain with an R/I-measurement transducer can be changed without interrupting operation. The measurement chamber is hermetically sealed - there is no contact between the fluid chamber and the reed chain.

With the microprocessor-controlled level indicator unit type 520, the level can be displayed directly in any arbitrary physical measurement unit. The indicator has a curve calculator with which non-linear tank contents can be displayed directly in cubic meters.

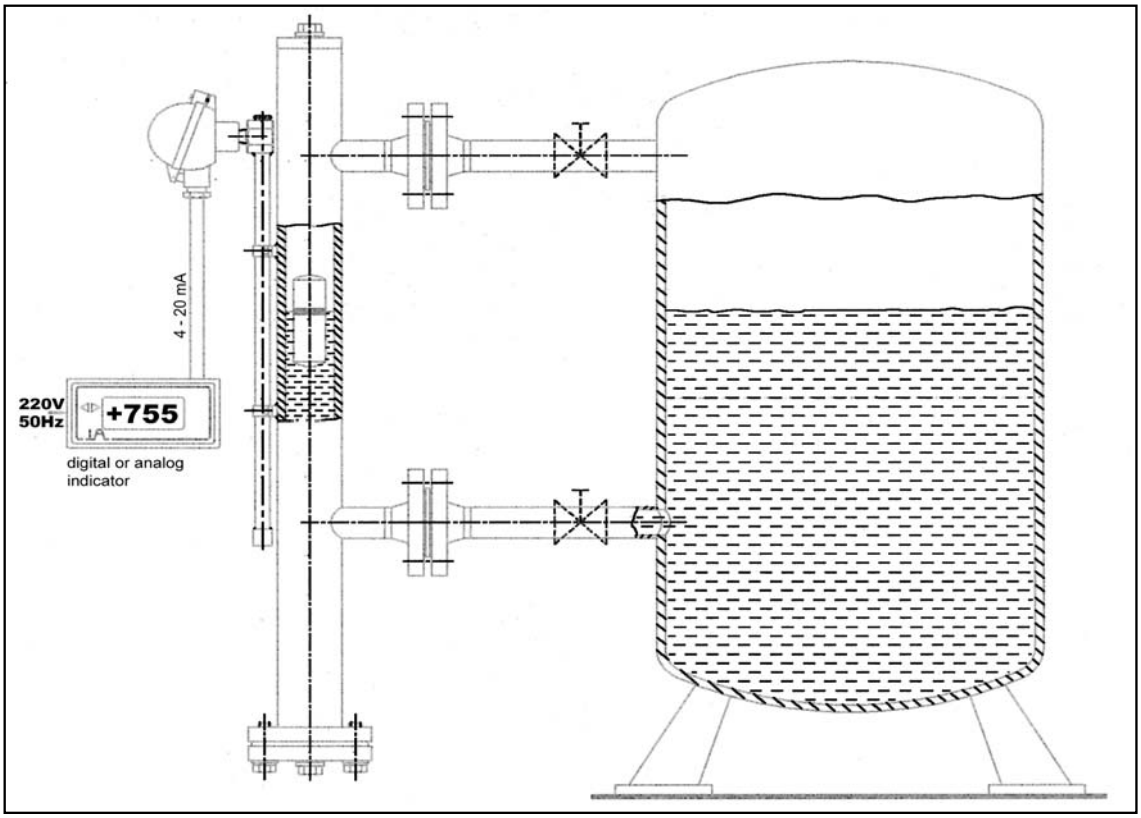

4.8 Niveau-source

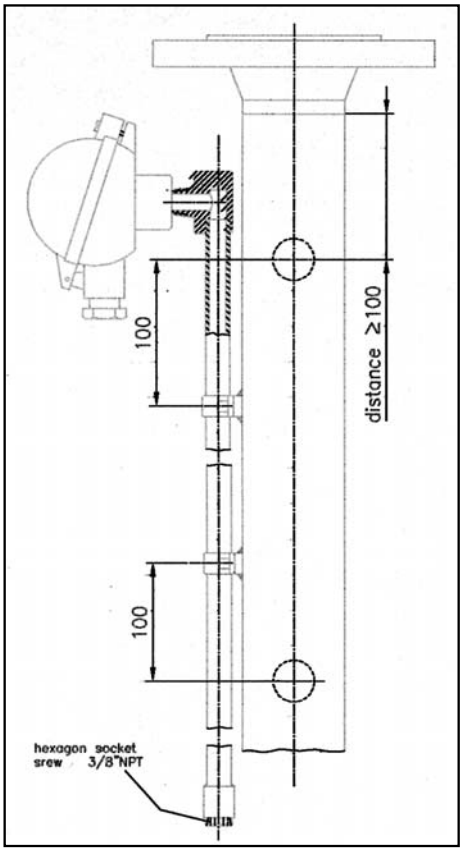

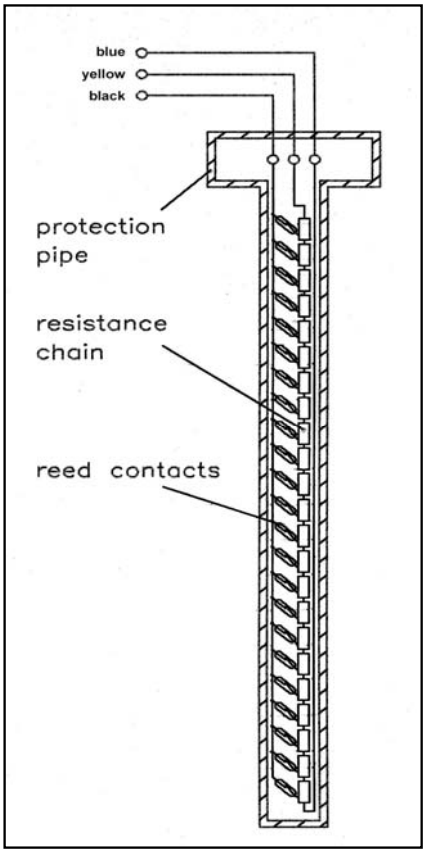

Measuring principle:
The resistance chain with the reed contacts are built in a pipe made of material 316SS. This so-called “Reed-chain” is mounted on the float chamber with tube clamps. According to the movement of the float, the float magnet closes one reed contact which produces a voltage (or resistance) proportional to the height of the liquid in the tank.
You get a near-analogous output signal, with a resolution of about 10 mm.
The resistance chain receives it’s power supply from the transmitter. The 4...20 mA transmitter output signal can be transferred to an indicator or can be used to drive alarm contacts. In the case of an error the output signal becomes higher than 22 mA.

Connection:
As a standard, the reed chain is supplied with a transmitter that is installed inside the housing-head, 2-wire connection to the transmitter is only required.

4.9 Reed-contact

Standard-reed chain

Max. medium temperature:	150 °C
Protection pipe:	∅ 14 mm
Material:	316Ti
Housing:	IP65

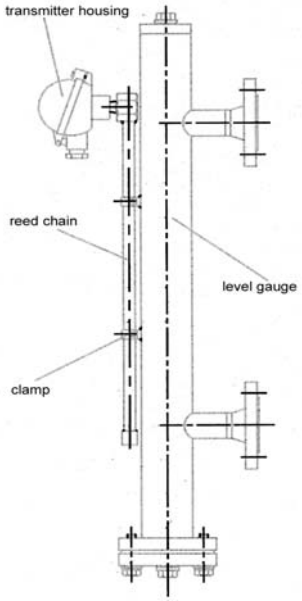

Reed chain for higher temperature

Max. medium temperature:	400 °C
Protection pipe:	∅ 14 mm
Material:	316Ti
Housing:	IP65
Heat protection:	50x4 mm

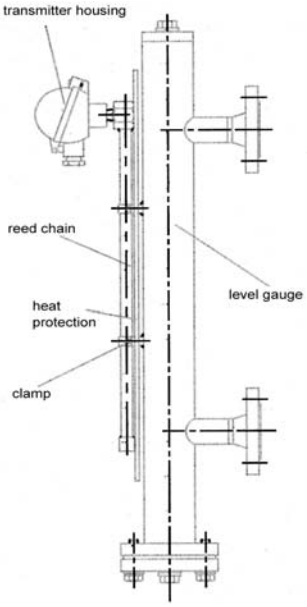

Clamp (standard)

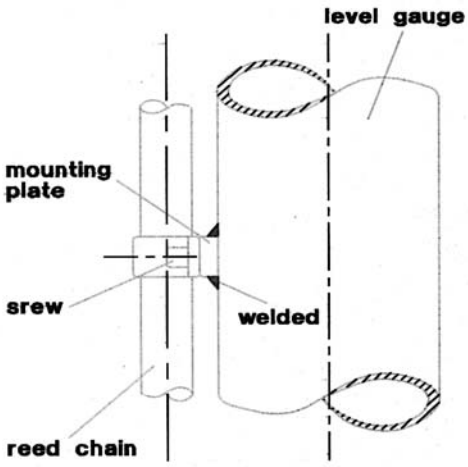

Clamp (special)

Will be needed by Armaflex insulation and secondary mounting of a reed chain.

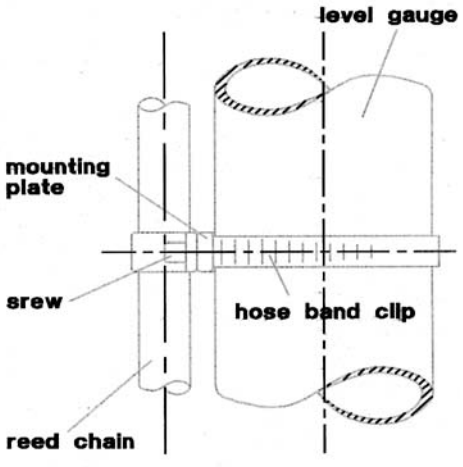

4.10 Magnetostricitve level transmitter

M-500 / M-600

Magnetostrictive transmitter for mounting to a level gauge type ITA.

M-500/M-600 series working on the magnetostrictive principle is high accuracy transmitter for affordable price. The float inside the level gauge type ITA moves along the magnetostrictive wire. A pulse generated by the electronics travels along the wire. When the pulse reaches the float's magnetic field, a twist develops in the wire. Reflected form the torsion point, the pulse creates an acoustic wave that travels back along the wire. The 4…20 mA output from the transmitter is proportional to the level.

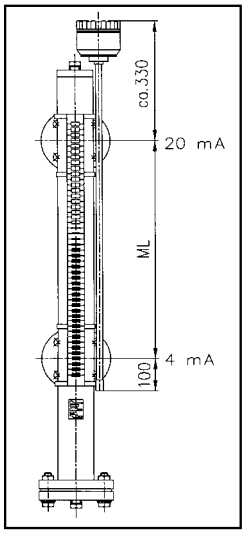

Technical data:

Type:	rigid version	flexible version
principle/design	magnetostrictive 2- wire transmitter	
measured process values	level, interface level	
sensor length	0,5…4,5 m	2…10 m
materials	sensor: 316Ti (1.4571), housing: Aluminium, powder paint coated or plastic (PTB)	
max. pressure	depends on the level gauge type ITA	
temperature	medium: max. 90°C (+400 °C for high-temperature-version) ambient: -40 °C..+70 °C	
linearity with dry calibration	± 1 mm	
resolution	0,1 mm or 1 mm (order-dependent)	
temperature coefficient	0,04 mm/°C	
measuring range	min. 200 mm	
medium density	depends on the level gauge type ITA	
outputs	analogue: 4…20 or 20…4 mA serial: HART interface /min. loop resistance: 250 Ohm display: 6 digits (7 mm characters) icons, units and bargraph	
damping	0…60 s, programmable	
error indication	3,8 mA or 22 mA	
output load	Rt=(Us-12,5V)/0,02A; Us = voltage of power supply	
power supply	12,5…36 V DC	
ATEX approval	Ex II 1 G EEx ia IIB T6…T5 Ex II2G EEx d IIV T6…T5 Ex II1/2G EEx d ia IIB T6…T5	
intrinsically safe area	Ex II	
protection	electric: class III ingress: IP67	
electrical connection	cable gland PG16 or M20x1,5 cable diameter: 8…15 mm, wire cross section: max. 1,5 mm²	
weight:	1,7 kg + sensor (sensor = 0,6 kg/m)	2,9 kg + sensor (sensor=0,3 kg/m)

Temperature classification for Ex-Application:

Temperature class	ambient temperature	process temperature
T6	-25…+70 °C	max. 400 °C, because no wetted parts
T5	-25…+59 °C	
T4	-25…+45 °C	

Order specifications:

M	**Magnetostrictive Level Transmitter**							
	Function						**/sensor design (depends on tube length)**	
	T	with transmitter					/rigid (0,5…3m); flexible (> 3 m)	
	B	with transmitter and display					/rigid (0,5…3m); flexible (> 3 m)	
		Connection to level gauge type ITA						
		U	Direct welded clamps (stainless steel)					
		UX	Hose clamps (stainless steel)					
			-					
				Material electronic housing				
				5	Aluminium (powder paint coated)			
				6	Plastic (PTB fiber-glass reinforced, flame retardant			
					Measuring length			
					ML	measuring length in mm		
						-		
						Output	**/resolution**	**/approval**
						2	4…20 mA	/1mm
						4	4…20 mA; Hart	/1mm
						6	4…20 mA	/1mm /Ex
						8	4…20 mA; Hart	/1mm /Ex
						A	4…20 mA	/5mm
						E	4…20 mA; Hart	/5mm /Ex

M			**-**			**-**	

4.11 Transmitters

Available housings

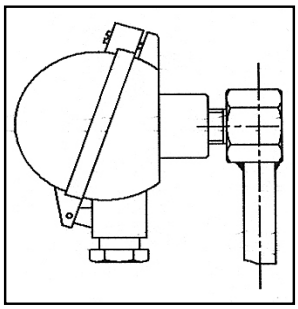

Standard-transmitter-housing
- material: aluminium
- PG 16 entry

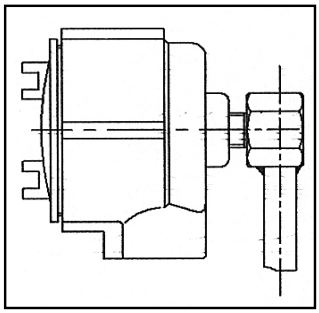

EExd-transmitter-housing
- material: aluminium epoxy coated
- 1/2" NPT cable entry

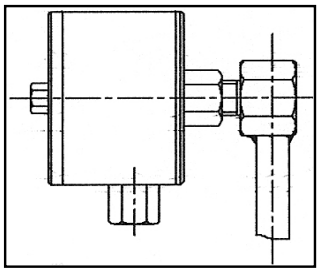

Stainless steel transmitter housing
- material: 316Ti
- M20x1,5 entry

Available transmitters

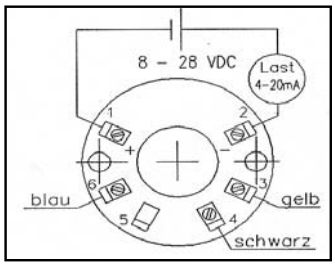

Type: INT5333B
- EEx ia IIC T5/T6
- output: 4…20 mA
- power supply: 2…36 V DC
- linearity: ± 1 %

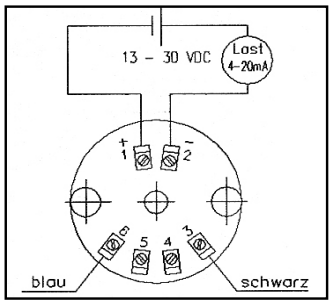

Type: TMT182
- EEx ia IIC T4
- output: 4…20 mA (Hart-protocol)
- power supply: 13…30 V DC
- linearity: 400 Ω-area ± 0,04 Ω 4000 Ω-area ± 0,5 Ω
- input: 5…400 Ω/50…4000 Ω

Other types of transmitters on request!

Transmitter type INT5333

INT5333
2-wire
programmable transmitter

2-WIRE PROGRAMMABLE TRANSMITTER INT-5333

- ♦ RTD or Ohm infput
- ♦ High measurement accuracy
- ♦ 3-wire connection
- ♦ programmable sensor error value
- ♦ for DIN form B sensor head mounting

Application:

- Linearized temperature measurement with Pt100…Pt1000 or Ni100…Ni1000 sensor
- Conversion of linear resistance variation to a standard analogue current signal, for instance from valves or Ohmic level sensors.

Technical characteristics:

- within a few seconds the user can program the INT5333 to measure temperatures with all RTD ranges defined by the standards.
- The RTD and resistance inputs have cable compensation for 2- and 3-wire connection.

Mounting/Installation:

- For DIN form B sensor head or DIN rail mounting with a special fitting.

Order information:

Type	Version	
INT5333	Standard:	**:A**
	EEx:	**:B**
	FM and EEx:	**:C**

Electrical specifications:

Specification range:

-40…+85 °C

Common specifications:

Supply voltage, DC	
Standard, INT5333A	8…35 V
EEx and FM, INT5333B and C	8…28 V DC
Internal consumption	35 mW…0,8 W
Voltage drop	8 V DC
Warm-up time	5 min.
Communications interface	Loop Link 5905
Signal/noise ratio	min. 60 dB
Response time (programmable)	0,33…60 s
Signal dynamics, input	19 bit
Signal dynamics, output	19 bit
Calibration temperature	20…28 °C

Accuracy, the greater of general and basic values:

General values		
Input type:	**Absolute accuracy**	**Temperature coefficient**
all	≤± 0,1 % of span	≤± 0,1 % of span / °C

Basic values		
Input type:	**Basic accuracy**	**Temperature coefficient**
RTD	≤± 0,3 °C	≤± 0,01 °C / °C
Lin. R.	≤± 0,2 Ω	≤± 20 Ω / °C

EMC immunity influence	≤± 0,5 % of span
Effect of supply voltage	≤± 0,005 % of span / V DC
Vibration:	IEC 68-2-6 Test FC
Lloyd's specification no. 1	4 g / 3…100 Hz
Max. wire size	1 x 1,5 mm²
Humidity	< 95 % RH (non-cond.)
Dimensions	∅44 x 20,2 mm
Tightness (enclosure/terminal)	IP68/IP00
Weight:	50 g

Electrical specifications, input:

RTD-type	min. value	max. value	min. span
Pt100	-200 °C	+850 °C	25 °C
Ni100	-60 °C	250 °C	25 °C
Lin.R.	0 Ω	10000 Ω	30 Ω

RTD and linear resistance input:

Max. offset	50 % of selected max. value
Cable resistance per wire (max.)	10 Ω
Sensor current	> 0,2 mA < 0,4 mA
Effect of sensor cable resistance (3-wire)	< 0,002 Ω/Ω
Sensor error detection	Yes

Output:

Current output:

Signal range	4…20 mA
Min signal range	16 mA
Updating time	135 ms
Load resistance	$\leq (V_{supply}-8)/0,023$ [Ω]
Load stability	< ±0,01 % of span / 100 Ω

Sensor error detection:

Programmable	3,5…23 mA
NAMUR NE 43 upscale	23 mA
NAMUR NE 43 downscale	3,5 mA

Ex data:

U_i	28 V DC
I_i	120 mA DC
P_i	0,84 W
L_i	≤ 10 µH
C_i	≤ 1 nF

EEx approval CENELEC:

DEMKO 03	ATEX 13705X
ATEX	0539 Ex II 1 GEExia IIC T1…T6
max. amb. temperature for T1…T4	85 °C
max. amb. temperature for T5 and T6	60 °C
Applicable in zone:	0, 1 or 2
FM	IS, Cl.I, Div.1 Gp.A-D
Entity, FM control drawing no.	5300Q502

Observed authority requirements:	**Standard:**
EMC 89/339/EEC	
Emission	EN50081-1, EN50081-2
Immunity	EN50082-2, EN50082-1
ATEX 94/9/EC	EN50014 and EN50020
FM class number	3600, 3610

Of span: of the presently selected range

Transmitter type TMT84 (Profibus)

Resistance transmitter
Type: TMT84

Head transmitter with Profibus-PA® interface. Supply and digital communication using PROFIBUS-PA®, for installation in a form B sensor head.

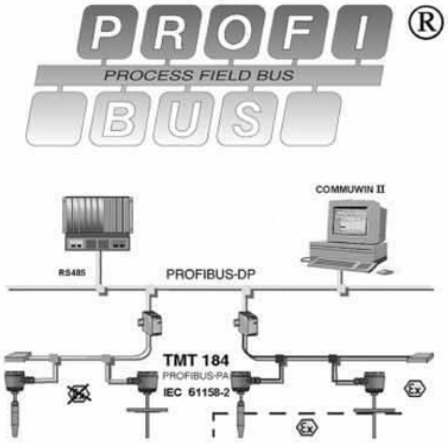

Features and benefits:

- Universally programmable for various input signals using PROFIBUS-PA®.
- DIP switch fro address setting (as option)
- High accuracy in the total ambient temperature range
- EMC to NAMUR NE 21, CE
- Certification:
  - ATEX
  - FM
  - CSA
- PROFIBUS-PA profile V3.0
- Galvanic isolation
- Customer specific address setting or expanded setup (see questionnaire page)

Application areas:

- Applied in a PROFIBUS-PA® environment, the process industry fieldbus, an open standard to EN50170 and IEC 61158-2
- Temperature head transmitter with PROFIBUS-PA® protocol for converting various input signals into a ditigal output signal
- Input:
  - Resistance thermometer (RTD)
  - Thermocouple (TC)
  - Resistance transmitter (Ω)
  - Voltage transmitter (mV)
- Swift and easy operation, visualization and maintenance using a PC direct from the control panel, e.g. using the COMMUWIN II operation software.

Operation and system construction

Measurement principle

Electronic measurement and conversion of input signals in industrial temperature measurement.

Measurement system

The TMT184 temperature head transmitter is a 2-wire transmitter with measurement inputs for resistance thermometers and
resistance transmitters in 2-, 3- or 4-wire connection, thermocouples and voltage transmitters. Applications are in the measurement and control areas for process monitoring. The TMT184 setup is done using the PROFIBUS-PA ®

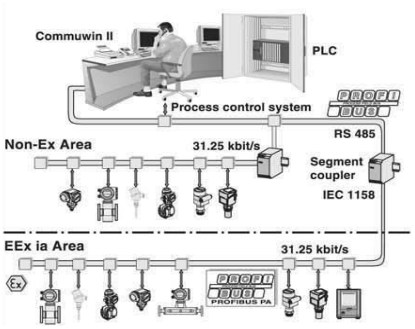

PROFIBUS-PA® is a open field bus standard in accordance with EN50170 and IEC61158-2, which has been specifically designed to handle the requirements of the process industry. In the simplest case a complete measurement circuit consists of a TMT184 fitted into a temperature sensor, a segment coupler, a PROFIBUS-PA® connection resistance, a PLC or a PC with an operating software.

The maximum number of transmitters that can be connected per bus segment is determined by the transmitter consumption, the maximum power of the segment coupler as well as the required bus length.

Normally:

- max. 9 TMT184 in an EEx ia explosion hazardous area per bus segment.
- max. 32 TMT184 in a non-explosion hazardous area per bus segment.

More detailed information for detailed project planning can be found in the operating manual.

Input values

Measurement value: Temperature (temperature linear), resistance and voltage

Measurement range: Dependent on the sensor connection and input signal the transmitter evaluates a number of different measurement ranges.

Type of input:

	Type	Measurement ranges	Min. measurement range
Resistance thermometer (RTD)	Pt100 Pt500 Pt1000 acc.to IEC 751	-200…850 °C (-328…1562 °F) -200…250 °C (-328… 482 °F) -200…250 °C (-328… 482 °F)	10 K 10 K 10 K
	Ni100 Ni500 Ni1000 acc.to DIN43760	-60…250 °C (-78…482 °F) -60…150 °C (-78…302 °F) -60…150 °C (-78…302 °F)	10 K 10 K 10 K
	-Connection type: 2-, 3- or 4-wire connection cable resistance compensation possible in the 2-wire system (0…30 Ω) -Sensor cable resistance: max. 11 Ω per cable -Sensor current: ≤ 0.2 mA		
Resistance transmitter	Resistance (Ω)	10…400 Ω 10…2000 Ω	10 Ω 100 Ω
Thermocouples (TC)	B(PtRh30-PtRh6) C(W5Re-W26Re)[I] D(W3Re-W25Re)[I] E(NiCr-CuNi) J(Fe-CuNi) K(NiCr-Ni) L(Fe-CuNi)[II] N(NiCrSi-NiSi) R(PtRh13-Pt) S(PtRh10-Pt) T(Cu-CuNi) U(Cu-CuNi)[II] MoRe5-MoRe41[III] acc.to IEC 584 Part 1	0…1820°C (32…3308 °F) 0…2320°C (32…4208 °F) 0…2495°C (32…4523 °F) -270…1000°C (-454…1832 °F) -210…1200°C (-346…2192 °F) -270…1372°C (-454…2192 °F) -200…900°C (-328…1652 °F) -270…1300°C (-454…2372 °F) -50…1768°C (-58…3214 °F) -50…1768°C (-58…3214 °F) -270…400°C (-454…752 °F) -200…600°C (-328…1112 °F) 0…2000°C (32…3632 °F)	500 K 500 K 500 K 50 K 50 K 50 K 50 K 50 K 500 K 500 K 50 K 50 K 500 K
	-Cold junction: internal (Pt100) -Cold juncion accuracy: ± 1 K		
Voltage transmitters (mV)	Millivolt transmitter (mV)	-10…75 mV	5 mV

I: according to ASTME 988
II: according to DIN 43710

Output values

Output signal
Physical data transmission (Physical layer type):
Fieldbus interface in acc. to IEC 61158-2.

Failure signal
Status message acc. to the PROFIBUS-PA® profile V3.0 specification.

Galvanic isolation
2 kV AC

Filter
Digital filter 1st degree 0...60 s

Current consumption
10 mA ± 1 mA

Error current
0 mA

Switch on delay
- 10 s

Data transmission speed
31,25 kBit/s, voltage mode

Signal code
Manchester II

Auxiliary energy

Electrical connection

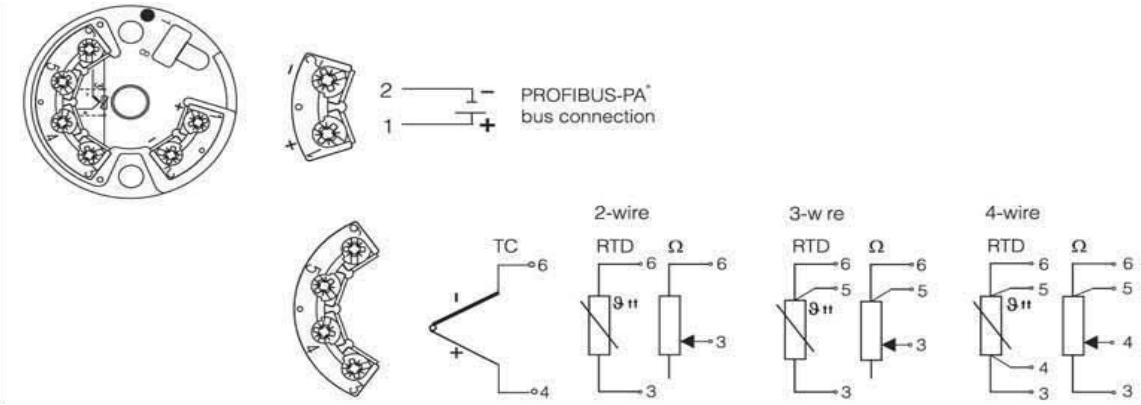

Head transmitter terminal layout

Power supply
Ub = 9...30 V DC non Ex area, polarity protected
Ub = 9...15 V DC Ex area, polarity protected

Accuracy

Response time: 1 s

Reference conditions: Calibration temperature: +23 °C ± 5 K

Maximum measured error:

	Type:	Measurement accuracy
Resistance Thermometer (RTD)	Pt100, Ni100 Pt500, Ni500 Pt1000, Ni1000	0,15 K 0,5 K 0,3 K
Thermocouple (TC)	K, J, T, E, L, U N, C, D S, V, R, MoRe5-MoRe41	typ. 0,5 K typ. 1,0 K typ. 2,0 K

	Meas. accuracy:	Measurement range
Resistance Transmitter (Ω)	± 0,1 Ω or 0,08 % ± 0,15 Ω or 0,12 %	10…400 Ω 20…2000 Ω
Voltage Transmitter (mV)	20 µV or 0,08 %	-10…75 mV

Influence of ambient temperature (temperature drift):
Resistance thermometer:
$T_d = \pm(15ppm/K*max.meas.range + 50ppm/K*preset\ meas.range)*\Delta\delta$
Thermocouple
$T_d = \pm(15ppm/K*max.meas.range + 50ppm/K*preset\ meas.range)*\Delta d$
$\Delta\delta$ = Deviation fo the ambient temperature according to the reference condition.

Long term stability: ≤ 0,1 K/year or ≤ 0,05 %/year

Influence of reference junction: Pt100 DIN IEC 751 Cl. B (internal reference junction for thermocouples)

Application conditions (installation conditions)

Installation hints:
- installation angle: no limitations

- installation area:
  connection head acc. to DIN 43729 Form B; field housing TAF 10

Application conditions (ambient conditions)

Ambient temperature: -40…+85 °C (for hazardous area see Ex-certificate)

Storage temperature: -40…+100 °C

Climate class: acc. to EN 60654-1, Class C

Condensation: allowable

Ingress protection: IP00, IP66 installed

Shock and vibration resistance: 4g/2…150 Hz acc. to IEC 60068-2-6

Electromagnetic compatibility (EMC): Interference immunity and interference emission acc. to EN 61326-1 (IEC 1326) and NAMUR NE 21

Mechanical construction

Dimensions:

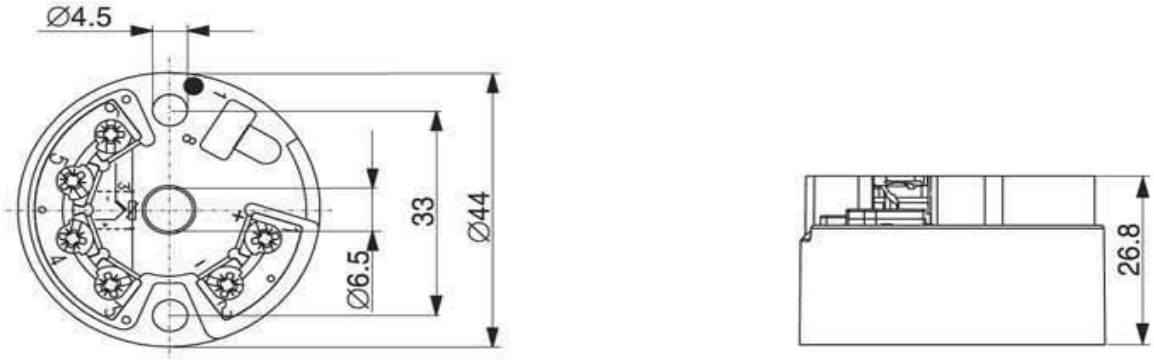

Head transmitter (dimensions in mm)

Weight:	approx. 40 g
Material:	- housing: PC - potting: PUR
Terminals:	cable up to max. 1,75 mm² (secure screws)

Display and operating system

Remote operation
Operation via PROFIBUS-PA® using a suitable configuration or operating software.

Certification

Ex-certification
Details regarding the availability of the Ex-versions (ATEX, FM, CSA etc.) can be obtained from your local sales organization. All relevant data for hazardous area protection can be found in separate Ex-documentation, which can be requested separately.

CE marking
The measurement system complies with the legal requirements laid out within the EU regulations.

Ordering codes TMT84:

Code	Description				
TMT84	**Head Transmitter**				
	Temperature transmitter with 2 sensor inputs and enhanced diagnosis functions for sensor monitoring. PROFIBUS-PA® protocol profile 3.01; Galvanic isolation 2 kV (input/output) Application: RTD, TC, Ω and MV; Consumtion: max. 11 mA; Installation: connection head for B acc. to DIN 43729; UL listed, CSA general purpose				
	Approvals / Certifications:				
	A1	ex-free area			
	B1	ATEX	II 1G Ex ia IIC T4/T5/T6		
	B2	ATEX	II 3G Ex nA IIC T4/T5/T6		
	B3	ATEX	II 3D		
	B4	ATEX	II 1G Ex ia IIC T6, II 3D		
	B5	ATEX	II 3G Ex nA IIC T6, II 3D		
	CA	FM+CSA	IS, NI I/1+2/ABCD		
	C1	FM	IS, NI I/1+2/ABCD		
	C2	CSA	IS, NI I/1+2/ABCD		
	D1	NEPSI	Ex ia IIC T4/T5/T6		
	D2	TIIS	Ex ia IIC T6		
	E1	IECEx	Ex ia IIC T4/T5/T6		
		Communication, output signal			
		A	PROFIBUS-PA®		
			Electrical connection		
			1	Spring terminals	
			2	Screw terminals	
			9	Special version, please specify	
				Mounting parts	
				A	Standard-DIN mounting set
				B	US-M4 mounting screws

TMT84					<== Ordering code [part 1] - 1 option each category has to be chosen

Additional options- no or multiple choice allowed.

					Configuration input:			
					A1	Ch1: RTD 2-wire, Ch2: not active		
					A2	Ch1: RTD 2-wire, Ch2: RTD 2-wire		
					A3	Ch1: RTD 2-wire, Ch2: RTD 3-wire		
					A4	Ch1: RTD 2-wire, Ch2: TC		
					B1	Ch1: RTD 3-wire, Ch2: not active		
					B2	Ch1: RTD 3-wire, Ch2: RTD 2-wire		
					B3	Ch1: RTD 3-wire, Ch2: RTD 3-wire		
					B4	Ch1: RTD 3-wire, Ch2: TC		
					C1	Ch1: RTD 4-wire, Ch2: not active		
					C2	Ch1: RTD 4-wire, Ch2: TC		
					D1	Ch1: TC, Ch2: not active		
					D2	Ch1: TC, Ch2: TC		
						Display + Operation		
						E1	meas. Value indication & dip switch, attachable (TID10)	
							Calibration + Test	
							F1	Works calibration cert. 6-point (fixed points)
								Tagging
								X1 TAG, field bus
								X2 TAG, paper (3 lines, each 16 characters)
								X3 TAG, metal (2 lines, each 16 characters)
								X4 Bus address (PA: 0…126)
								X5 TAG on transmitter

TMT84								

Questionnaire TMT84 temperature transmitter
Customer specific setup

Standard setup

Channel 1 (Ch1)

RTD

- ☐ Pt50, GOST
- ☐ Pt100, IEC751
- ☐ Pt100, JIS C1604-81
- ☐ Pt100, GOST
- ☐ Pt200, IEC 751
- ☐ Pt500, IEC 751
- ☐ Pt1000, IEC 751
- ☐ Ni100, DIN 43760
- ☐ Ni120, Edison Curve
- ☐ Ni1000, DIN 43760
- ☐ Cu10 Edison Curve no. 15
- ☐ Cu50, GOST
- ☐ Cu100, GOST

TC

- ☐ B ☐ E ☐ J ☐ K
- ☐ N ☐ R ☐ S ☐ T

IEC584

- ☐ C ☐ D ASTM E988
- ☐ L ☐ U DIN 43710

Channel 2, Ch2

RTD

- ☐ Pt50, GOST
- ☐ Pt100, IEC751
- ☐ Pt100, JIS C1604-81
- ☐ Pt100, GOST
- ☐ Pt200, IEC 751
- ☐ Pt500, IEC 751
- ☐ Pt1000, IEC 751
- ☐ Ni100, DIN 43760
- ☐ Ni120, Edison Curve
- ☐ Ni1000, DIN 43760
- ☐ Cu10 Edison Curve no. 15
- ☐ Cu50, GOST
- ☐ Cu100, GOST

TC

- ☐ B ☐ E ☐ J ☐ K
- ☐ N ☐ R ☐ S ☐ T

IEC584

- ☐ C ☐ D ASTM E988
- ☐ L ☐ U DIN 43710

Unit

☐ °C ☐ °F

Interconnection*

- ☐ PV1 = Ch1; PV2 = Ch2 (default)
- ☐ PV1 = Ch1-Ch2; Difference value
- ☐ PV1 = 0,5 x (Ch1+Ch2), Average value
- ☐ PV1 = Ch1 (or Ch2) Backup

*only if Channel 2 is active

Mag. Level Gauge
Special equipment & Accessories

Order Codes for Electronic Accessories and Switches

Code	Description
	Switches
S10	mag. switch type 1690, 3 m cable Protection class: IP68, max. operation temperature: 120°C ***(Art.-No. 641.6502.380LI)***
S20	mag. switch type 1690 ATEX , 3 m cable Protection class: IP67 BVS03 ATEX, max. operation temperature 120°C ***(Art.-Nr. 610.045N1001)***
SXK	Cable length > 3 m, each additional m (please specify)
SXS	Hose clamp for switch 1690 and 1690 ATEX
S30	Mag. switch type LMS-A Protection class IP65, max. operation temperature: 200°C *(without special*
S3G	Mag. switch type LMS-A with gold plated contacts 8 VDC
S3D	Mag. switch type LMS-A mounted in EExd housing
S3E	Mag. switch type LMS-A with gold plated contacts 8 VDC
S40	Mag. switch type: LMS-AH
S4G	Mag. switch type LMS-AH with gold plated contacts 8 VDC
S4D	Mag. switch type LMS-AH mounted in EExd housing
S4E	Mag. switch type LMS-AH with gold plated contacts 8 VDC + mounted in Eexd housing
S50	Mag. switch type NI-EX with P&F proximation initiator acc. NAMUR Protection class IP65 EExia ATEX, max. operation temperature: 60 °C
S5H	Mag. switch type NI-EX with P&F proximation initiator acc. NAMUR with additional heat protection, max. operation temperature: 400 °C
S6H	Switch type MS9, with micro switch and additional heat protection max. operation temperature: 400°C
S70	Switch type MS10, with micro switch Protection class IP65, max. operation temperature: 200°C, max. 250 VAC/10A mounted in Eexd housing
S7H	Switch type MS10, with micro switch with additional heat protection Protection class IP65, max. operation temperature: 400°C, max. 250 VAC/10A mounted in Eexd housing
S80	Switch type MAK 9924
	Cable entry for switch (all switches, except 1690/1690ATEX
1	M20 x 1,5
2	1/2" NPT
3	3/4" NPT
	Isolation amplifier for NI-EX switch
T01	Isolation amplifier for NI-EX switch; type: KFAG-SR2-EX1.W; one channel
T02	Isolation amplifier for NI-EX switch; type: KFAG-SR2-EX2.W; two channels

Mag. Level Gauge
Special equipment & Accessories

Order Codes for Electronic Accessories and Switches

Code	Description
	Reed chain
R05	Reed chain, resolution 5 mm, base price
L	add. price each 100 mm
0	without heat protection
H	with heat protection, max 400 °C / each 100 mm
R10	Reed chain, resolution 10 mm, max. 150 °C, base price
L	add. price each 100 mm
0	without heat protection
H	with heat protection, max 400 °C / each 100 mm
R20	Reed chain, resolution 20 mm, base price
L	add. price each 100 mm
0	without heat protection
H	with heat protection, max 400 °C / each 100 mm
RXS	Clamps for reed chain / 2 pcs.
	Transmitter
M10	Transmitter type: INT5333A
M11	Transmitter type: INT5333A with ExD-housing
M12	Transmitter type: INT5333A with stainless steel housing
M20	Transmitter type: INT5333B EX intrinsically safe
M22	Transmitter type: INT5333B EX intrinsically safe with stainless steel housing
M30	Transmitter type: INT5335A SMART/HART-technology
M32	Transmitter type: INT5335B Ex-proof with SMART/HART-technology with stainless steel housing
M33	Transmitter type: INT5350B with Foundation Fieldbus
M35	Transmitter type: INT5350B with Foundation Fieldbus; EExia ATEX
M34	Transmitter type: TMT142 with Foundation Fieldbus and digital indicator
0	without Ex-protection
1	EExia ATEX
M36	Transmitter type STT 3000 with digital indicator electr. Class EExd; output 4…20 mA
	Cable entry for transmitter housings
1	M20 x 1,5
2	1/2" NPT
3	3/4" NPT
	Digital indicator
D10	Digital indicator mounted in transmitter housing (only with reed-chain) DSM-40-indicator, standard version input 4-20 mA; display ± 19999
D11	Digital indicator mounted in transmitter housing (only with reed-chain) DSM-40-indicator, standard version input 4-20 mA; display ± 19999; EEx-version
D20	Digital indicator IA-N24-S, input 4-20 mA; 24 VDC for 2-wire-transmitters
D21	Digital indicator IA-N30U, input 4-20 mA; 24 VDC for 2-wire-transmitters add. 4-20 mA-output
D22	Digital indicator IA-N30U, input 4-20 mA; 24 VDC for 2-wire-transmitters add- 2 off. contacts
D23	Digital indicator IA-N30U, input 4-20 mA; 24 VDC for 2-wire-transmitters add. 2 off contacs and 4-20 mA-output

Mag. Level Gauge
Special equipment & Accessories

Order Codes for Electronic Accessories and Switches

Code	Description
	Electronic heat tape
H10	Electronic heat tape without Ex-protection, base price add. price each 100 mm
H11	Electronic heat tape connection set
H12	Electronic heat tape connection socket, material CS
H20	Electronic heat tape, Ex-version add. price each 100 mm
H21	Electronic heat tape connection set Ex-version
H22	Electronic heat tape connection socket, material CS / EExd housing
H23	Electronic heat tape thermostat Ex-version
H30	Electronic heat tape for high temperature applications (> 200 °C)
H31	Electronic heat tape for high temperature applications (> 200 °C), Ex-Version
	Power supply
SG1	Power supply 220 V / 50 Hz
	Indication rail
Z01	Aluminium indication rail coated (Epoxy-coat: Saekaphen); colour: white add. price each 100 mm
	Measuring scale
Z02	Graduated scale, graved, material: 316SS, base price add. price each 100 mm:
Z02	Graduated scale, graved, material: Aluminium, base price add. price each 100 mm:
	Steam jacket
Z05	Steam jacket, max. 6 bar, threaded connection, material 1.4404 (only available with add. price each 100 mm:
Z06	Steam jacket, max. 6 bar, flanged connection DN 15 PN 16 (1/2" 150#), add. price each 100 mm:
	Vent/drain fittings
Z07	Vent-/drain valve 1/2" NPT / material 1.4401
Z08	Vent-/drain valve 1/2" NPT / material PTFE
Z09	Vent-/drain valve 1/2" NPT / material PP
Z10	Vent-/drain valve 1/2" NPT / material PVDF
Z11	Vent-/drain ball valve 1/2" NPT / material 1.4401
Z12	Vent-/drain valve 1/2" NPT, einseitig geflanscht mit DN 15 PN 16
Z13	Vent-/drain valve 1/2" NPT / material: 1.4401
	Insulation
Z14	Low-temperature-insulation Armaflex -75...+105 °C (only available with Aluminium-indication rail and Titanium float) (each 100 mm)
Z15	Low-temperature-insulation with mineral wool with 316SS arming (each 100 mm)
Z16	Heat insulation ceramic tape; op. temperature up to 600 °C (only available with Aluminium-indication rail and Titanium float) (each 100 mm)
Z17	Insulation guide plate*, material 1.4404; height = 80 mm Equipment for Armaflex- or ceramic insulation (each 100 mm)
Z18	Makrolon window for insulation (each 100 mm)

Mag. Level Gauge
Special equipment & Accessories

Order Codes for Electronic Accessories and Switches

Code	Description
	Painting
Z19	Device completely painted with RAL-colour (grounding + main paint)
Z20	Aluminium grey RAL 9007 (80°C) with Hempel's Silicone Aluminium 56910 (600°C)
ZPY	other paintings
	Security Springs
Z21	spring at top of gauge
Z22	spring at bottom of gauge

*

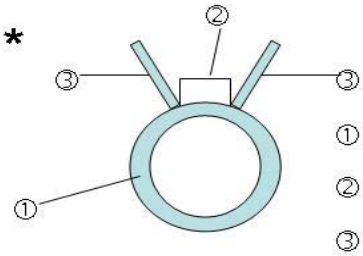

① Float pipe

② Indication rail

③ Guide plate for insulation mounting

Mag. Level Gauge
Special designs

Ordering Codes for Special designs

Code	Description
ITA-3 BV	Bureau Veritas
ITA-6 BV	Bureau Veritas
ITA-3 GL	Design for maritime and inland navigation acc. rules of "German Lloyd"
ITA-6 GL	Design for maritime and inland navigation acc. rules of "German Lloyd"
ITA-3 LR	Lloyd's Register
ITA-6 LR	Lloyd's Register
ITA-6 D	Design as steam regulator acc. TRD incl. 2 switches type: LMS-AH
ITA-7-D	Design as steam regulator acc. TRD incl. 2 switches type: LMS-AH
ITA-3 / 3.0 Ex	Design for Ex-zone 0 *(following 94/9/EG: II 1 Gc IIC T1...T6)*
ITA-4 /4.0 Ex	Design for Ex-zone 0 *(following 94/9/EG: II 1 Gc IIC T1...T6)*
ITA-4.1 / 4.1.0 Ex	Design for Ex-zone 0 *(following 94/9/EG: II 1 Gc IIC T1...T6)*
ITA-5 / 5.0 Ex	Design for Ex-zone 0 *(following 94/9/EG: II 1 Gc IIC T1...T6)*
ITA-6 / 6.0 Ex	Design for Ex-zone 0 *(following 94/9/EG: II 1 Gc IIC T1...T6)*
ITA-7 / 7.0 Ex	Design for Ex-zone 0 *(following 94/9/EG: II 1 Gc IIC T1...T6)*
ITA-10 / 10.0 Ex	Design for Ex-zone 0 *(following 94/9/EG: II 1 Gc IIC T1...T6)*
ITA-11 / 11.0 Ex	Design for Ex-zone 0 *(following 94/9/EG: II 1 Gc IIC T1...T6)*
ITA-12 / 12.0 Ex	Design for Ex-zone 0 *(following 94/9/EG: II 1 Gc IIC T1...T6)*

Mag. Level Gauge
Spare Parts

Order codes for mag. Level Gauges type: ITA

	Description						
Floats							
Code	**Pressure [bar]**	**Material**	**Diameter [mm]**	**Length [mm]**	**min. Density [kg/dm³]**	**vented [Y/N]**	**Notes**
Floats for ITA-3 and ITA-3.0 (PN16/150 lbs)							
3V0100K1	16	316L	52	125	1,4907	N	
3V0100K3	16	316L	52	125	1,0524	N	only with 316SS or Aluminium indication rail
3V0120K1	16	316L	52	145	1,2346	N	
3V0120K3	16	316L	52	145	0,9034	N	only with 316SS or Aluminium indication rail
3V0150K1	16	316L	52	175	0,9905	N	
3V0150K3	16	316L	52	175	0,8606	N	only with 316SS or Aluminium indication rail
3V0180K1	16	316L	52	205	0,8781	N	
3V0180K3	16	316L	52	205	0,7022	N	only with 316SS or Aluminium indication rail
3V0240K1	16	316L	52	265	0,7374	N	
3V0240K3	16	316L	52	265	0,6209	N	only with 316SS or Aluminium indication rail
3V1240K1	40	316L	52	265	1,000	N	
3T0100K1	16	Titanium	50,8	125	1,1788	N	do not use with hydrogen or alcohol compounds
3T0100K3	16	Titanium	50,8	125	0,7821	N	only with 316SS or Aluminium indication rail; do not use with hydrogen or alcohol compounds
3T0120K1	16	Titanium	50,8	145	0,9646	N	do not use with hydrogen or alcohol compounds
3T0120K3	16	Titanium	50,8	145	0,6514	N	only with 316SS or Aluminium indication rail; do not use with hydrogen or alcohol compounds
3T0150K1	16	Titanium	50,8	175	0,7763	N	do not use with hydrogen or alcohol compounds
3T0150K3	16	Titanium	50,8	175	0,5675	N	only with 316SS or Aluminium indication rail; do not use with hydrogen or alcohol compounds
3T0180K1	16	Titanium	50,8	205	0,6716	N	do not use with hydrogen or alcohol compounds
3T0180K3	16	Titanium	50,8	205	0,5094	N	only with 316SS or Aluminium indication rail; do not use with hydrogen or alcohol compounds
3T0240K1	16	Titanium	50,8	265	0,5723	N	do not use with hydrogen or alcohol compounds
3T0240K3	16	Titanium	50,8	265	0,4550	N	only with 316SS or Aluminium indication rail; do not use with hydrogen or alcohol compounds
3T0300K1	16	Titanium	50,8	325	0,4955	N	do not use with hydrogen or alcohol compounds
3T0300K3	16	Titanium	50,8	325	0,4063	N	only with 316SS or Aluminium indication rail; do not use with hydrogen or alcohol compounds
3T0400K1	16	Titanium	50,8	425	0,4358	N	do not use with hydrogen or alcohol compounds
3T0400K3	16	Titanium	50,8	425	0,3719	N	only with 316SS or Aluminium indication rail; do not use with hydrogen or alcohol compounds
3T0500K1	16	Titanium	50,8	525	0,4017	N	do not use with hydrogen or alcohol compounds
3T0500K3	16	Titanium	50,8	525	0,3539	N	only with 316SS or Aluminium indication rail; do not use with hydrogen or alcohol compounds
3T0600K1	16	Titanium	50,8	625	0,3761	N	do not use with hydrogen or alcohol compounds
3T0600K3	16	Titanium	50,8	625	0,3371	N	only with 316SS or Aluminium indication rail; do not use with hydrogen or alcohol compounds
3H0150K1	16	Titanium, Halar-coated	52	175	0,9020	N	
3HC012K1	16	Hastelloy C4	52	175	1,2455	N	
3HC024K1	16	Hastelloy C4	52	265	0,7510	N	
3HC024K3	16	Hastelloy C4	52	265	0,6296	N	only with 316SS or Aluminium indication rail
Floats for ITA-3 Cryo (PN16/150 lbs, for cryogenic applications)							
3C0240K1	16	Titanium	50,8	265	0,5723	N	without spacers; do not use for hydrogen or alcohol compound
3C0500K1	16	Titanium	45	525	0,5509	N	with spacers; do not use for hydrogen or alcohol compound
3C0500K3	16	Titanium	45	525	0,5038	N	with spacers; only with 316SS or Aluminium indication rail; do not use for hydrogen or alcohol compound

Mag. Level Gauge
Spare Parts

Order codes for mag. Level Gauges type: ITA

	Description						
Floats							
Code	**Pressure [bar]**	**Material**	**Diameter [mm]**	**Length [mm]**	**min. Density [kg/dm³]**	**vented [Y/N]**	**Notes**
Floats for ITA-3-CR64 and ITA-3.0-CR64 (PN16/150 lbs, for cryogenic applications)							
3C0501K1	16	Titanium	50,8	525	0,4017	N	with spacers; do not use for hydrogen or alcohol compound
3C0501K2	16	Titanium	50,8	525	0,3890	N	with spacers; do not use for hydrogen or alcohol compound
Floats for ITA-3.5 (PN16/150 lbs, wetted parts E-CTFE (Halar)-coated)							
35H024K1	16	Titanium, Halar-coatec	52	240	0,6873	N	
35H024K3	16	Titanium, Halar-coatec	52	240	0,5645	N	only with 316SS or Aluminium indication rail
Floats for ITA-3.8 (PN16/150 lbs, wetted parts E-CTFE (Halar)-coated, applicable for vacuum-service)							
34PVD1K1	10	E-TFE	50	135	1,3000	N	
34PVD2K1	10	E-TFE	50	255	0,8500	N	
34GLA2K2	10	Borosilicate	50	255	0,8500	N	
Floats for ITA-4 and ITA-4.0 (PN16/150 lbs, top-of tank mounting)							
[max. Rod length: A = 500 mm; B = 750 mm; C = 1000 mm; D = 1250 mm; E = 1500 mm; F = 1750 mm; H = 2000]							
4V0240R1A	16	316L	52,0	265	0,9500	N	
4V0240R1B	16	316L	52,0	265	1,0000	N	
4T0240R1A	16	Titanium	50,8	265	0,6890	N	do not use with hydrogen or alcohol compounds
4T0240R1B	16	Titanium	50,8	265	0,7250	N	do not use with hydrogen or alcohol compounds
4T0240R1C	16	Titanium	50,8	265	0,7610	N	do not use with hydrogen or alcohol compounds
4T0240R1D	16	Titanium	50,8	265	0,7970	N	do not use with hydrogen or alcohol compounds
4T0240R1E	16	Titanium	50,8	265	0,8330	N	do not use with hydrogen or alcohol compounds
4T0240R1F	16	Titanium	50,8	265	0,8690	N	do not use with hydrogen or alcohol compounds
4T0240R1H	16	Titanium	50,8	265	0,9050	N	do not use with hydrogen or alcohol compounds
4T0240K2A	16	Titanium	50,8	265	0,6480	N	do not use with hydrogen or alcohol compounds
4T0240K2B	16	Titanium	50,8	265	0,6840	N	do not use with hydrogen or alcohol compounds
4T0240K2C	16	Titanium	50,8	265	0,7200	N	do not use with hydrogen or alcohol compounds
4T0240K2D	16	Titanium	50,8	265	0,7560	N	do not use with hydrogen or alcohol compounds
4T0240K2E	16	Titanium	50,8	265	0,7920	N	do not use with hydrogen or alcohol compounds
4T0240K2F	16	Titanium	50,8	265	0,8280	N	do not use with hydrogen or alcohol compounds
4T0240K2H	16	Titanium	50,8	265	0,8640	N	do not use with hydrogen or alcohol compounds
4T0240K3A	16	Titanium	50,8	265	0,5820	N	only with 316SS or Aluminium indication rail; do not use with hydrogen or alcohol compounds
4T0240K3B	16	Titanium	50,8	265	0,6810	N	only with 316SS or Aluminium indication rail; do not use with hydrogen or alcohol compounds
4T0240K3C	16	Titanium	50,8	265	0,6540	N	only with 316SS or Aluminium indication rail; do not use with hydrogen or alcohol compounds
4T0240K3D	16	Titanium	50,8	265	0,6900	N	only with 316SS or Aluminium indication rail; do not use with hydrogen or alcohol compounds
4T0240K3E	16	Titanium	50,8	265	0,7260	N	only with 316SS or Aluminium indication rail; do not use with hydrogen or alcohol compounds
4T0240K3F	16	Titanium	50,8	265	0,7620	N	only with 316SS or Aluminium indication rail; do not use with hydrogen or alcohol compounds
4T0240K3H	16	Titanium	50,8	265	0,7980	N	only with 316SS or Aluminium indication rail; do not use with hydrogen or alcohol compounds
4T0300R1A	16	Titanium	50,8	325	0,6010	N	do not use with hydrogen or alcohol compounds
4T0300R1B	16	Titanium	50,8	325	0,6290	N	do not use with hydrogen or alcohol compounds
4T0300R1C	16	Titanium	50,8	325	0,6580	N	do not use with hydrogen or alcohol compounds
4T0300R1D	16	Titanium	50,8	325	0,6870	N	do not use with hydrogen or alcohol compounds
4T0300R1E	16	Titanium	50,8	325	0,7160	N	do not use with hydrogen or alcohol compounds
4T0300R1F	16	Titanium	50,8	325	0,7450	N	do not use with hydrogen or alcohol compounds
4T0300R1H	16	Titanium	50,8	325	0,7730	N	do not use with hydrogen or alcohol compounds

Mag. Level Gauge
Spare Parts

Order codes for mag. Level Gauges type: ITA

	Description						
Floats							
Code	**Pressure [bar]**	**Material**	**Diameter [mm]**	**Length [mm]**	**min. Density [kg/dm³]**	**vented [Y/N]**	**Notes**
Floats for ITA-4 and ITA-4.0 (PN16/150 lbs, top-of tank mounting) (Continuation)							
[max. Rod length: A = 500 mm; B = 750 mm; C = 1000 mm; D = 1250 mm; E = 1500 mm; F = 1750 mm; H = 2000]							
4T0300K2A	16	Titanium	50,8	325	0,5680	N	do not use with hydrogen or alcohol compounds
4T0300K2B	16	Titanium	50,8	325	0,5970	N	do not use with hydrogen or alcohol compounds
4T0300K2C	16	Titanium	50,8	325	0,6250	N	do not use with hydrogen or alcohol compounds
4T0300K2D	16	Titanium	50,8	325	0,6540	N	do not use with hydrogen or alcohol compounds
4T0300K2E	16	Titanium	50,8	325	0,6830	N	do not use with hydrogen or alcohol compounds
4T0300K2F	16	Titanium	50,8	325	0,7120	N	do not use with hydrogen or alcohol compounds
4T0300K2H	16	Titanium	50,8	325	0,7410	N	do not use with hydrogen or alcohol compounds
4T0300K3A	16	Titanium	50,8	325	0,5120	N	only with 316SS or Aluminium indication rail; do not use with hydrogen or alcohol compounds
4T0300K3B	16	Titanium	50,8	325	0,5410	N	only with 316SS or Aluminium indication rail; do not use with hydrogen or alcohol compounds
4T0300K3C	16	Titanium	50,8	325	0,5690	N	only with 316SS or Aluminium indication rail; do not use with hydrogen or alcohol compounds
4T0300K3D	16	Titanium	50,8	325	0,5980	N	only with 316SS or Aluminium indication rail; do not use with hydrogen or alcohol compounds
4T0300K3E	16	Titanium	50,8	325	0,6270	N	only with 316SS or Aluminium indication rail; do not use with hydrogen or alcohol compounds
4T0300K3F	16	Titanium	50,8	325	0,6560	N	only with 316SS or Aluminium indication rail; do not use with hydrogen or alcohol compounds
4T0300K3H	16	Titanium	50,8	325	0,6850	N	only with 316SS or Aluminium indication rail; do not use with hydrogen or alcohol compounds
Floats for ITA-4.1 and ITA-4.1.0 (atm., top-of tank mounting)							
[max. Rod length: A = 500 mm; B = 750 mm; C = 1000 mm; D = 1250 mm; E = 1500 mm; F = 1750 mm; H = 2000]							
4T0152R1A	ATM	Titanium	80	175	0,4070	N	do not use with hydrogen or alcohol compounds
4T0152R1B	ATM	Titanium	80	175	0,4310	N	do not use with hydrogen or alcohol compounds
4T0152R1C	ATM	Titanium	80	175	0,4540	N	do not use with hydrogen or alcohol compounds
4T0152R1D	ATM	Titanium	80	175	0,4770	N	do not use with hydrogen or alcohol compounds
4T0152R1E	ATM	Titanium	80	175	0,5000	N	do not use with hydrogen or alcohol compounds
4T0152R1F	ATM	Titanium	80	175	0,5240	N	do not use with hydrogen or alcohol compounds
4T0152R1H	ATM	Titanium	80	175	0,5470	N	do not use with hydrogen or alcohol compounds
4T0152K2A	ATM	Titanium	80	175	0,4700	N	do not use with hydrogen or alcohol compounds
4T0152K2B	ATM	Titanium	80	175	0,4310	N	do not use with hydrogen or alcohol compounds
4T0152K2C	ATM	Titanium	80	175	0,4540	N	do not use with hydrogen or alcohol compounds
4T0152K2D	ATM	Titanium	80	175	0,4770	N	do not use with hydrogen or alcohol compounds
4T0152K2E	ATM	Titanium	80	175	0,5000	N	do not use with hydrogen or alcohol compounds
4T0152K2F	ATM	Titanium	80	175	0,5240	N	do not use with hydrogen or alcohol compounds
4T0152K2H	ATM	Titanium	80	175	0,5470	N	do not use with hydrogen or alcohol compounds
4T0152K3A	ATM	Titanium	80	175	0,4710	N	only with 316SS or Aluminium indication rail; do not use with hydrogen or alcohol compounds
4T0152K3B	ATM	Titanium	80	175	0,4940	N	only with 316SS or Aluminium indication rail; do not use with hydrogen or alcohol compounds
4T0152K3C	ATM	Titanium	80	175	0,5180	N	only with 316SS or Aluminium indication rail; do not use with hydrogen or alcohol compounds
4T0152K3D	ATM	Titanium	80	175	0,5410	N	only with 316SS or Aluminium indication rail; do not use with hydrogen or alcohol compounds
4T0152K3E	ATM	Titanium	80	175	0,5640	N	only with 316SS or Aluminium indication rail; do not use with hydrogen or alcohol compounds
4T0152K3F	ATM	Titanium	80	175	0,6870	N	only with 316SS or Aluminium indication rail; do not use with hydrogen or alcohol compounds
4T0152K3H	ATM	Titanium	80	175	0,6100	N	only with 316SS or Aluminium indication rail; do not use with hydrogen or alcohol compounds

Mag. Level Gauge
Spare Parts

Order codes for mag. Level Gauges type: ITA

	Description						
Floats							
Code	**Pressure [bar]**	**Material**	**Diameter [mm]**	**Length [mm]**	**min. Density [kg/dm³]**	**vented [Y/N]**	**Notes**
Floats for ITA-4.1 and ITA-4.1.0 (atm., top-of tank mounting) / Continuation							
[max. Rod length: A = 500 mm; B = 750 mm; C = 1000 mm; D = 1250 mm; E = 1500 mm; F = 1750 mm; H = 2000]							
4T0182R1A	ATM	Titanium	80	205	0,3620	N	do not use with hydrogen or alcohol compounds
4T0182R1B	ATM	Titanium	80	205	0,3810	N	do not use with hydrogen or alcohol compounds
4T0182R1C	ATM	Titanium	80	205	0,4000	N	do not use with hydrogen or alcohol compounds
4T0182R1D	ATM	Titanium	80	205	0,4200	N	do not use with hydrogen or alcohol compounds
4T0182R1E	ATM	Titanium	80	205	0,4390	N	do not use with hydrogen or alcohol compounds
4T0182R1F	ATM	Titanium	80	205	0,4580	N	do not use with hydrogen or alcohol compounds
4T0182R1H	ATM	Titanium	80	205	0,4780	N	do not use with hydrogen or alcohol compounds
4T0182K2A	ATM	Titanium	80	205	0,3370	N	do not use with hydrogen or alcohol compounds
4T0182K2B	ATM	Titanium	80	205	0,3570	N	do not use with hydrogen or alcohol compounds
4T0182K2C	ATM	Titanium	80	205	0,3760	N	do not use with hydrogen or alcohol compounds
4T0182K2D	ATM	Titanium	80	205	0,3950	N	do not use with hydrogen or alcohol compounds
4T0182K2E	ATM	Titanium	80	205	0,4150	N	do not use with hydrogen or alcohol compounds
4T0182K2F	ATM	Titanium	80	205	0,3430	N	do not use with hydrogen or alcohol compounds
4T0182K2H	ATM	Titanium	80	205	0,4530	N	do not use with hydrogen or alcohol compounds
4T0182K3A	ATM	Titanium	80	205	0,3000	N	only with 316SS or Aluminium indication rail; do not use with hydrogen or alcohol compounds
4T0182K3B	ATM	Titanium	80	205	0,3190	N	only with 316SS or Aluminium indication rail; do not use with hydrogen or alcohol compounds
4T0182K3C	ATM	Titanium	80	205	0,3380	N	only with 316SS or Aluminium indication rail; do not use with hydrogen or alcohol compounds
4T0182K3D	ATM	Titanium	80	205	0,3580	N	only with 316SS or Aluminium indication rail; do not use with hydrogen or alcohol compounds
4T0182K3E	ATM	Titanium	80	205	0,3770	N	only with 316SS or Aluminium indication rail; do not use with hydrogen or alcohol compounds
4T0182K3F	ATM	Titanium	80	205	0,3960	N	only with 316SS or Aluminium indication rail; do not use with hydrogen or alcohol compounds
4T0182K3H	ATM	Titanium	80	205	0,4160	N	only with 316SS or Aluminium indication rail; do not use with hydrogen or alcohol compounds
4T0242R1A	ATM	Titanium	80	265	0,2980	N	do not use with hydrogen or alcohol compounds
4T0242R1B	ATM	Titanium	80	265	0,3120	N	do not use with hydrogen or alcohol compounds
4T0242R1C	ATM	Titanium	80	265	0,3270	N	do not use with hydrogen or alcohol compounds
4T0242R1D	ATM	Titanium	80	265	0,3410	N	do not use with hydrogen or alcohol compounds
4T0242R1E	ATM	Titanium	80	265	0,3560	N	do not use with hydrogen or alcohol compounds
4T0242R1F	ATM	Titanium	80	265	0,3700	N	do not use with hydrogen or alcohol compounds
4T0242R1H	ATM	Titanium	80	265	0,3850	N	do not use with hydrogen or alcohol compounds
4T0242K2A	ATM	Titanium	80	265	0,2800	N	do not use with hydrogen or alcohol compounds
4T0242K2B	ATM	Titanium	80	265	0,2940	N	do not use with hydrogen or alcohol compounds
4T0242K2C	ATM	Titanium	80	265	0,3090	N	do not use with hydrogen or alcohol compounds
4T0242K2D	ATM	Titanium	80	265	0,3230	N	do not use with hydrogen or alcohol compounds
4T0242K2E	ATM	Titanium	80	265	0,3880	N	do not use with hydrogen or alcohol compounds
4T0242K2F	ATM	Titanium	80	265	0,3520	N	do not use with hydrogen or alcohol compounds
4T0242K2H	ATM	Titanium	80	265	0,3670	N	do not use with hydrogen or alcohol compounds
4T0242K3A	ATM	Titanium	80	265	0,2530	N	only with 316SS or Aluminium indication rail; do not use with hydrogen or alcohol compounds
4T0242K3B	ATM	Titanium	80	265	0,2680	N	only with 316SS or Aluminium indication rail; do not use with hydrogen or alcohol compounds
4T0242K3C	ATM	Titanium	80	265	0,2820	N	only with 316SS or Aluminium indication rail; do not use with hydrogen or alcohol compounds
4T0242K3D	ATM	Titanium	80	265	0,2970	N	only with 316SS or Aluminium indication rail; do not use with hydrogen or alcohol compounds
4T0242K3E	ATM	Titanium	80	265	0,3110	N	only with 316SS or Aluminium indication rail; do not use with hydrogen or alcohol compounds
4T0242K3F	ATM	Titanium	80	265	0,3260	N	only with 316SS or Aluminium indication rail; do not use with hydrogen or alcohol compounds
4T0242K3H	ATM	Titanium	80	265	0,3400	N	only with 316SS or Aluminium indication rail; do not use with hydrogen or alcohol compounds

Mag. Level Gauge
Spare Parts

Order codes for mag. Level Gauges type: ITA

	Description						
Floats							
Code	**Pressure [bar]**	**Material**	**Diameter [mm]**	**Length [mm]**	**min. Density [kg/dm³]**	**vented [Y/N]**	**Notes**
Floats for ITA-5 (top-bottom connection)							
Please see ITA-3 to ITA-13							
Floats for ITA-6 and ITA-6.0 (PN40/300 lbs)							
6V0100K1	30	316L	52	125	1,5188	N	
6V0100K3	30	316L	52	125	1,0891	N	only with 316SS or Aluminium indication rail
6V0120K1	30	316L	52	145	1,2780	N	
6V0120K3	30	316L	52	145	0,9519	N	only with 316SS or Aluminium indication rail
6V0150K1	30	316L	52	175	1,0711	N	
6V0150K3	30	316L	52	175	0,8309	N	only with 316SS or Aluminium indication rail
6V0180K1	30	316L	52	205	0,9486	N	
6V0180K3	30	316L	52	205	0,8140	N	only with 316SS or Aluminium indication rail
6V0240K1	30	316L	52	265	0,7738	N	
6V0240K3	30	316L	52	265	0,6513	N	only with 316SS or Aluminium indication rail
6T0100K1	40	Titanium	50,8	125	1,3114	N	do not use with hydrogen or alcohol compounds
6T0100K3	40	Titanium	50,8	125	0,8975	N	only with 316SS or Aluminium indication rail do not use with hydrogen or alcohol compounds
6T0120K1	40	Titanium	50,8	145	1,1007	N	do not use with hydrogen or alcohol compounds
6T0120K3	40	Titanium	50,8	145	0,7837	N	only with 316SS or Aluminium indication rail do not use with hydrogen or alcohol compounds
6T0150K1	40	Titanium	50,8	175	0,9029	N	do not use with hydrogen or alcohol compounds
6T0150K3	40	Titanium	50,8	175	0,6763	N	only with 316SS or Aluminium indication rail do not use with hydrogen or alcohol compounds
6T0180K1	40	Titanium	50,8	205	0,7791	N	do not use with hydrogen or alcohol compounds
6T0180K3	40	Titanium	50,8	205	0,6100	N	only with 316SS or Aluminium indication rail do not use with hydrogen or alcohol compounds
6T0240K1	40	Titanium	50,8	265	0,6391	N	do not use with hydrogen or alcohol compounds
6T0240K3	40	Titanium	50,8	265	0,5187	N	only with 316SS or Aluminium indication rail do not use with hydrogen or alcohol compounds
6T0300K1	40	Titanium	50,8	325	0,5694	N	do not use with hydrogen or alcohol compounds
6T0300K3	40	Titanium	50,8	325	0,4812	N	do not use with hydrogen or alcohol compounds
6T0400K1	40	Titanium	50,8	425	0,5300	N	do not use with hydrogen or alcohol compounds
6T0400K3	40	Titanium	50,8	425	0,4373	N	only with 316SS or Aluminium indication rail do not use with hydrogen or alcohol compounds
6T0500K1	40	Titanium	50,8	525	0,4463	N	do not use with hydrogen or alcohol compounds
6T0500K3	40	Titanium	50,8	525	0,4098	N	only with 316SS or Aluminium indication rail do not use with hydrogen or alcohol compounds
6T0600K1	40	Titanium	50,8	625	0,4370	N	do not use with hydrogen or alcohol compounds
6T0600K3	40	Titanium	50,8	625	0,3834	N	only with 316SS or Aluminium indication rail do not use with hydrogen or alcohol compounds
6H0200K1	40	Titanium, Halar-coatec	52	265	0,7674	N	
6H0200K3	40	Titanium, Halar-coatec	52	265	0,6470	N	only with 316SS or Aluminium indication rail
6HC012K1	40	Hastelloy C4	52	145	1,2400	N	
6HC024K1	40	Hastelloy C4	52	265	0,7470	N	
6HC024K3	40	Hastelloy C4	52	265	0,6600	N	only with 316SS or Aluminium indication rail
Floats for ITA-6 Cryo and ITA-6.0 Cryo (PN40/300 lbs; cryogenic applications)							
6C0240K1	40	Titanium	50,8	265	0,6391	N	without spacers do not use with hydrogen or alcohol compounds
6C0500K1	40	Titanium	45	525	0,5981	N	with spacers do not use with hydrogen or alcohol compounds
6HC024K3	24	Hastelloy C4	52	265	0,66	N	with spacers, only with Aluminium or SS indication rail
Floats for ITA-6-CR64 and ITA-6.0-CR64 (PN40/300 lbs; cryogenic applications)							
6C0240K1	40	Titanium	50,8	265	0,6391	N	with spacers do not use with hydrogen or alcohol compounds
6C0501K1	40	Titanium	45	525	0,5981	N	with spacers, only with Aluminium or SS indication rail do not use with hydrogen or alcohol compounds

Mag. Level Gauge
Spare Parts

Order codes for mag. Level Gauges type: ITA

	Description						
Floats							
Code	**Pressure [bar]**	**Material**	**Diameter [mm]**	**Length [mm]**	**min. Density [kg/dm³]**	**vented [Y/N]**	**Notes**
Floats for ITA-7 and ITA-7.0 (PN64/300 lbs)							
7T0240K1	64	Titanium	50,8	265	0,6820	N	do not use with hydrogen or alcohol compounds
7T0240K3	64	Titanium	50,8	265	0,5551	N	only with 316SS or Aluminium indication rail do not use with hydrogen or alcohol compounds
7T0300K1	64	Titanium	50,8	325	0,6064	N	do not use with hydrogen or alcohol compounds
7T0300K3	64	Titanium	50,8	325	0,5168	N	only with 316SS or Aluminium indication rail do not use with hydrogen or alcohol compounds
7T0500K3	64	Titanium	50,8	525	0,4450	N	only with 316SS or Aluminium indication rail do not use with hydrogen or alcohol compounds
7T0600K3	64	Titanium	50,8	625	0,4243	N	only with 316SS or Aluminium indication rail do not use with hydrogen or alcohol compounds
Floats for ITA-8.1 (PN6; PVC)							
8PVC01K1	10	PVC	50	135	1,1500	N	only with 316SS or Aluminium indication rail
8PVC02K1	10	PVC	50	255	0,7500	N	only with 316SS or Aluminium indication rail
Floats for ITA-8.2 (PN6; PP)							
8PVC01K1	10	PP	50	135	0,9500	N	only with 316SS or Aluminium indication rail
8PVC02K1	10	PP	50	255	0,6500	N	only with 316SS or Aluminium indication rail
Floats for ITA-8.3 (PN6; PVDF)							
8PVC01K1	10	PVDF	50	135	1,3000	N	only with 316SS or Aluminium indication rail
8PVC02K1	10	PVDF	50	255	0,8500	N	only with 316SS or Aluminium indication rail
Floats for ITA-9.1 (PN6; PVC; mounted from top of tank)							
9PVC03K1	6	PVC	50	135		N	only with 316SS or Aluminium indication rail
Floats for ITA-9.2 (PN6; PP; mounted from top of tank)							
9PP030K1	6	PP	50			N	only with 316SS or Aluminium indication rail
Floats for ITA-9.3 (PN6; PVDF; mounted from top of tank)							
9PVD03K1	6	PP	50			N	only with 316SS or Aluminium indication rail
Floats for ITA-10 and ITA-10.0 (PN100/600 lbs)							
10V324K3	100	316L	52	265	0,6122	Y	only with 316SS or Aluminium indication rail
10T024K1	80	Titanium	50,8	265	0,7011	N	do not use for hydrogen or alcohol compound
10T024K3	80	Titanium	50,8	265	0,5823	N	only with 316SS or Aluminium indication rail; do not use for hydrogen or alcohol compound
10T030K1	80	Titanium	50,8	325	0,6212	N	do not use for hydrogen or alcohol compound
10T030K3	80	Titanium	50,8	325	0,5275	N	only with 316SS or Aluminium indication rail; do not use for hydrogen or alcohol compound
10T040K1	80	Titanium	50,8	425	0,5515	N	do not use for hydrogen or alcohol compound
10T040K3	80	Titanium	50,8	425	0,4871	N	only with 316SS or Aluminium indication rail; do not use for hydrogen or alcohol compound
10T050K1	80	Titanium	50,8	525	0,5095	N	do not use for hydrogen or alcohol compound
10T050K3	80	Titanium	50,8	525	0,4574	N	only with 316SS or Aluminium indication rail; do not use for hydrogen or alcohol compound
10T060K1	80	Titanium	50,8	625	0,4632	N	do not use for hydrogen or alcohol compound
10T060K3	80	Titanium	50,8	625	0,4209	N	only with 316SS or Aluminium indication rail; do not use for hydrogen or alcohol compound
10T124K1	100	Titanium	50,8	265	0,8299	N	do not use for hydrogen or alcohol compound
10T124K3	100	Titanium	50,8	265	0,7006	N	only with 316SS or Aluminium indication rail; Float for high-temperature applications; do not use for hydrogen or alcohol compound
10T130K1	100	Titanium	50,8	325	0,7617	N	do not use for hydrogen or alcohol compound
10T130K3	100	Titanium	50,8	325	0,6594	N	only with 316SS or Aluminium indication rail; do not use for hydrogen or alcohol compound
10T140K1	100	Titanium	50,8	425	0,6779	N	do not use for hydrogen or alcohol compound
10T140K3	100	Titanium	50,8	425	0,6075	N	only with 316SS or Aluminium indication rail; do not use for hydrogen or alcohol compound
10T150K1	100	Titanium	50,8	525	0,6321	N	do not use for hydrogen or alcohol compound
10T150K3	100	Titanium	50,8	525	0,5775	N	only with 316SS or Aluminium indication rail; do not use for hydrogen or alcohol compound

Mag. Level Gauge
Spare Parts

Order codes for mag. Level Gauges type: ITA

	Description						
Floats							
Code	**Pressure [bar]**	**Material**	**Diameter [mm]**	**Length [mm]**	**min. Density [kg/dm³]**	**vented [Y/N]**	**Notes**
Floats for ITA-11 and ITA-11.0 (PN160/1500 lbs)							
11V324K2	160	316L	46	265	0,7736	Y	
11T330K2	160	Titanium	46	325	0,4901	Y	do not use for hydrogen or alcohol compound
11T018K1	130	Titanium	45	205	1,0185	N	do not use for hydrogen or alcohol compound
11T018K3	130	Titanium	45	205	0,8455	N	only with 316SS or Aluminium indication rail; do not use for hydrogen or alcohol compound
11T024K1	130	Titanium	45	265	0,8600	N	do not use for hydrogen or alcohol compound
11T024K3	130	Titanium	45	265	0,7450	N	only with 316SS or Aluminium indication rail; do not use for hydrogen or alcohol compound
11T030K1	130	Titanium	45	325	0,7822	N	do not use for hydrogen or alcohol compound
11T030K3	130	Titanium	45	325	0,6949	N	only with 316SS or Aluminium indication rail; do not use for hydrogen or alcohol compound
11T040K1	130	Titanium	45	425	0,7028	N	do not use for hydrogen or alcohol compound
11T040K3	130	Titanium	45	425	0,6391	N	only with 316SS or Aluminium indication rail; do not use for hydrogen or alcohol compound
11T050K1	130	Titanium	45	525	0,6587	N	do not use for hydrogen or alcohol compound
11T050K3	150	Titanium	45	525	0,6106	N	only with 316SS or Aluminium indication rail; do not use for hydrogen or alcohol compound
11T124K3	150	Titanium	46	265	0,7324	N	only with 316SS or Aluminium indication rail; do not use for hydrogen or alcohol compound
11T130K3	150	Titanium	46	325	0,7042	N	only with 316SS or Aluminium indication rail; do not use for hydrogen or alcohol compound
11T140K3	150	Titanium	46	425	0,6164	N	only with 316SS or Aluminium indication rail; do not use for hydrogen or alcohol compound
11T150K3	150	Titanium	46	525	0,6008	N	only with 316SS or Aluminium indication rail; do not use for hydrogen or alcohol compound
11T218K1	160	Titanium	42	205	1,1692	N	do not use for hydrogen or alcohol compound
11T218K3	160	Titanium	42	205	0,9291	N	only with 316SS or Aluminium indication rail; do not use for hydrogen or alcohol compound
11T224K1	160	Titanium	42	265	0,9768	N	do not use for hydrogen or alcohol compound
11T224K3	160	Titanium	42	265	0,8120	N	only with 316SS or Aluminium indication rail; do not use for hydrogen or alcohol compound
11T230K1	160	Titanium	42	325	0,8871	N	do not use for hydrogen or alcohol compound
11T230K3	160	Titanium	42	325	0,7613	N	only with 316SS or Aluminium indication rail; do not use for hydrogen or alcohol compound
11T240K1	160	Titanium	42	425	0,7832	N	do not use for hydrogen or alcohol compound
11T240K3	160	Titanium	42	425	0,6934	N	only with 316SS or Aluminium indication rail; do not use for hydrogen or alcohol compound
11T250K1	160	Titanium	42	525	0,7268	N	do not use for hydrogen or alcohol compound
11T250K3	160	Titanium	42	525	0,6571	N	only with 316SS or Aluminium indication rail; do not use for hydrogen or alcohol compound
Floats for ITA-12 and ITA-12.0 (PN250/1500 lbs)							
12V324K3	250	316L	46	265	0,7736	Y	
12T324K3	250	Titanium	46	265	0,5526	Y	only with 316SS or Aluminium indication rail; do not use for hydrogen or alcohol compound
12T218K1	250	Titanium	42	205	1,2085	N	do not use for hydrogen or alcohol compound
12T218K3	250	Titanium	42	205	0,9659	N	only with 316SS or Aluminium indication rail; do not use for hydrogen or alcohol compound
12T224K1	250	Titanium	42	265	1,0396	N	do not use for hydrogen or alcohol compound
12T224K3	250	Titanium	42	265	0,9659	N	only with 316SS or Aluminium indication rail; do not use for hydrogen or alcohol compound
12T230K1	250	Titanium	42	325	0,9250	N	do not use for hydrogen or alcohol compound
12T230K3	250	Titanium	42	325	0,7978	N	only with 316SS or Aluminium indication rail; do not use for hydrogen or alcohol compound
12T240K1	250	Titanium	42	425	0,8304	N	do not use for hydrogen or alcohol compound
12T240K3	250	Titanium	42	425	0,7394	N	only with 316SS or Aluminium indication rail; do not use for hydrogen or alcohol compound

Mag. Level Gauge
Spare Parts

Order codes for mag. Level Gauges type: ITA

	Description						
Floats							
Code	**Pressure [bar]**	**Material**	**Diameter [mm]**	**Length [mm]**	**min. Density [kg/dm³]**	**vented [Y/N]**	**Notes**
Floats for ITA-12 and ITA-12.0 (PN250/1500 lbs) (Continuation)							
12T124K3	250	Titanium	38	265	0,8944	N	only with 316SS or Aluminium indication rail; do not use for hydrogen or alcohol compound
12T130K3	250	Titanium	38	325	0,8281	N	only with 316SS or Aluminium indication rail; do not use for hydrogen or alcohol compound
12T250K1	250	Titanium	42	525	0,7763	N	do not use for hydrogen or alcohol compound
12T250K3	250	Titanium	42	525	0,7055	N	only with 316SS or Aluminium indication rail; do not use for hydrogen or alcohol compound
Floats for ITA-13 and ITA-13.0 (PN320/2500 lbs)							
13V330K3	320	316L	38	325	0,7269	Y	only with 316SS or Aluminium indication rail
13T324K3	320	Titanium	38	265	0,5366	Y	only with 316SS or Aluminium indication rail; do not use for hydrogen and alcohol compound
13T024K3	320	Titanium	38	265	0,8985	N	only with 316SS or Aluminium indication rail; do not use for hydrogen and alcohol compound
13T330K3	320	Titanium	38	325	0,5032	Y	only with 316SS or Aluminium indication rail; do not use for hydrogen and alcohol compound
13T040K3	320	Titanium	38	425	0,7582	N	only with 316SS or Aluminium indication rail; do not use for hydrogen and alcohol compound

mag. level gauges
type: ITA
Spare parts

Order codes for Spare Parts

Code	Description	Material
E01	Indication Rail, max. oper. temp. 100 °C	Markolon
E02	Indication Rail, max. oper. temp. 400 °C	Aluminium
E03	Indication Rail, max. oper. temp. 400 °C	1.4301
E04	Gasket for ITA-3…ITA-7, max oper. temp. 100 °C	PTFE
E05	Gasket for ITA-3…ITA-7, max oper. temp. 400 °C	Klingersil
E06	Spiral wound or comb profiled gasket for ITA7…ITA11, max oper. Temp. 400 °C	1.4571
E07	spiral wound or comb profiled gasket for ITA12…ITA13, max oper. Temp. 400 °C	1.4571
E08	Gaskets for all mag. level gauges made from plastics	Viton
E09	Clamp for indication rails	VA
E10	Gaskets for vent-/drain plug R1/2"	Copper
E11		PTFE
E12		Soft Iron

More Spare parts, as well as special floats on request.

Mag. Level Gauge
Inspection, Testing, Documentation

General Documentation

Code	Description
D001	Certificate of Conformity
D003	Drawings for special types
D004	Certificate of origin
D005	Certificate of orign by German Chamber of Commerce
D006	Legalised by Embassy of recipient
D007	Standard QA-Plan
D008	Inspection certificate
D009	QA-Manual
D009a	Calibration certificate
D009b	Legalised by
D009c	***Documents on CD*** only **one** manual or technical information
D009d	**up to 4** manuals or technical information
D009e	manuals incl. e.g. 3.1B, drawings, cert. of conf. etc.
D009f	add. documents as paper print

Orderwise Documentation

Code	Description
D010	Production schedule
D011	Manufacturing Progress Status Report
D012	Test Procedures (Covering Manufacturing)
D013	Welding Procedures (WPS, PQR),
D014	Welding Procedures (WPS, PQR),

Mag. Level Gauge
Inspection, Testing, Documentation

Material certificates

Code	Description
D015	Material Certificate EN 10204:2004-2.2
D016	Material certificates acc. EN 10204:2004-3.1, for ITA-3 to ITA-6, please advise if cast marking for pressure retaining parts required Cast marking of pressure retaining parts
D016a	for special material (ITA3 to ITA-6) Cast marking of pressure retaining parts
D017	Material certificates acc. EN 10204:2004-3.1, for ITA-7 to ITA-13, please advise if cast marking for pressure retaining parts required Cast marking of pressure retaining parts
D017a	for special material (ITA7 to ITA-13) Cast marking of pressure retaining parts
D018	Material certificates acc. EN 10204:2004-3.2 (former 3.1C or 3.1A)

CE Declaration of conformity acc. PED 97/23/EG

Code	Description
D019	**Category sound engineering paractice** manufactured and tested acc. Module A1, checked against diagram 1of PED 97/23/EG
D020	**Category I,II und III** manufactured and tested acc. Module H, checked against diagram 1of PED 97/23/EG
D022	**Category IV** manufactured and tested acc. Modul G. Layout test and inspection by German TÜV

Inspection and Testing

Code	Description
D023	Hydr. pressure test incl. test certificate
D024	Inspection And Pressure Testing acc. AD-Merkblatt, TRB and TRD By German TÜV, incl. Cast Marking and Certificates EN 10204 3.1B, for Standard ITA
D025	Inspection And Pressure Testing acc. AD-Merkblatt, TRB and TRD By German TÜV, incl. Cast Marking and Certificates EN 10204 3.1B, for Special Constructed ITA
D026	Radiographic Examination Of Welds (Only Buttwelds) ***acc. DIN 54111***
D026.1	Radiographic Examination Of Welds (Only Buttwelds) ***acc. ASME Sec. VIII***

Mag. Level Gauge
Inspection, Testing, Documentation

Inspection and Testing (Continuation)

Code	Description
D027	Dyepenetrant Examination Of Welds acc. **EN473:2000** and **PED**
D027.1	Dyepenetrant Examination Of Welds acc. **ASME Sec. VIII**
D028	Härteprüfung nach NACE MR01-75, incl. NACE-
D029	Weight Certificate (for all units of an order)
D030	PMI-Check
D031	Percentage of ferrite in welding

Certificates for electronic equipment

Code	Description
D032	Standard wiring plans and data sheets
D033	ATEX-certificates

General notes:

The standard documentation mentioned in our quotations and order acknowledgements consists of:
1 off installation & operation manual (hard copy)

5. Special Constructions

5.1 ITA-T1S Continuous level sensing element

Technical Information / ITA-T1S special features

- Simple and rugged design
- reliable performance in liquids with densities of ≥ 0,5 kg/dm³
- short mounting depth ≥ 300 mm (11.81"), therefore suitable for small vessels.
- indicating length up to 3000 mm (118")
- resistant to pressures of ≤ 40 bar (580 psi g) and temperatures of ≤ 300 °F (266 °F)
- housing: casst aluminium or stainless steel in IP65, equivalent to NEMA 4 and NEMA 4X enclosure
- wide variety of material combinations
- various plastic coatings availabel for all wetted parts
- 4…20 mA or Hart protocol 4…20 mA output via the signal amplifier

Fig 1: ITA-T1S with Eexd housing and tank mounting flange

Introduction

Intra-Automation does not limit you with the standard designs catalogued here. Our experienced engineering staff, with extensive research and development capabilities, will customize liquid level indicators to meet your specific requirements. Modifications regarding the variety of mountings, exotic materials and float configurations provide compatibility for most liquid media, various tank temperatures and pressures, as well as liquids with a broad range of specific gravities.

Operation

The ITA-T1S Liquid Level Transmitters, vertically mounted in the tank and cable connected (3-wire) to a remote receiver, operates on the float principle.
A float guided on a non-magnetic tube follows the level of the liquid surface, thereby actuating the reed switches located inside the tube by means of a built-in magnet system. The reed switches shunt over parts of a resistor string.
The magnet system operates the reed switches according to the position of the float and thus causes the Ω resistance of the resistor string to change as a function for liquid level.
A current 4...20 mA is then obtained as an output signal together with the INT5333; INT5333ATEX; TMT182 signal conditioner. The float travel distance can be limited by stops fitted to the guide tube.

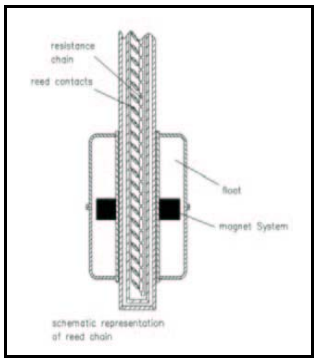

Fig 2 diagammatic view of reed switches

Monitoring

Combined with DigiFlow 520 these transmitters form a complete liquid level monitoring system. Used as a separate system with a process control system, Intra transmitters can interface with programmable controllers and other industrial microprocessors.

Fig 3 Digiflow 520

Interface Measuring

Very often dissimilar liquids resides in a tank. Most tank gauging methods are limited in these cases and only indicate the level of the uppermost surface. But, with using Intra-Automation level sensing elements, you can easily monitor the interface between liquids. By adjusting the specific gravity of the magnet float, Intra can adapt the transmitter to monitor the interface of a broad range of media. This principle applies to oil and water, slurries, acid, bilge and other dissimilar liquids.
In conjunction with DigiFlow 520 tank level, ITA-T1S will help assure that only the “correct” liquid is taken from a tank, or introduced into a process system.

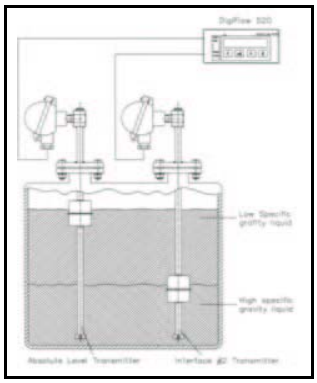

Fig 4 Interface level measurement

Technical data

Level Transmitter	ITA-T1S
overall length	0,3…6 m (0.98…19.69 ft)
measurement accuracy	± 5, 10 or 20 mm (± 0.2", 0.39" or 0.79")
ambient temperature	
• aluminium housing	-40…+60 °C (-40…+140 °F)
• stainless steel housing	-40…+60 °C (-40…+140 °F)
tank product	
• temperature	-10…+100 °C (-14…+212 °F)
• min. density	0,5 kg/dm³ (32.21 lbs/ft³)
• max. allowable op. pressure	40 bar (580 psi g)
protection category DIN 40050/IEC144	IP65 (NEMA 4, NEMA 4X)
terminals	
cable entry	
• aluminium housing	PG16 (optional M20x1.5)
• stainless steel housing	PG13,5 (optional M20x1.5)
	other entries on request
current output connection	
• screw connection acc. ISO	R 1/2"
• screw connection acc. ANSI/NEMA	1/2" NPT
• flanges acc. DIN	DN50, DN100, PN16 and PN40
• flanges acc. ANSI	2", 4" class 150 lbs/RF or 300 lbs/RF
	other connections on request
materials	
housing	
• standard	cast aluminium (option: with epoxy finish)
• special	stainless steel
• explosion proof	cast aluminium with epoxy finish
flange	carbon steel, stainless steel, (optional Halar-coated), PP, PVC, PVDF
thread	stainless steel
guide tube	carbon steel, stainless steel, (optional Halar-coated), PP, PVC, PVDF
float	see "float type"

Float type

type [1)]	shape	dimensions in mm (inches)	material	min. density kg/dm³ (lbs/ft³	max. op. Pressure in bar (psi g) @ 20 °C (38 °F)	max. liquid temperature in °C (°F)
A	spherical	∅ 52 (2.05)	1.4571 (316Ti)	0,7 (43.70)	40 (580)	-40…+100 (-40…+266)
B	spherical	∅ 80 (3.15)	3.7035 (Titanium)	0,6 (37.46)	17 (247)	-40…+100 (-40…+266)
C	cylindrical	∅ 80x35 (3.15x1.38)	1.4571 (316Ti)	0,5 (31.21)	13 (189)	-40…+100 (-40…+266)
D	cylindrical	∅ 44x52	1.4571 (316Ti)	0,8 (49.94)	25 (362)	-40…+100 (-40…+266)
E	cylindrical	∅ 32x34	Buna N	0,55	10 (150)	0…+82 (-18…+180)
F	cylindrical	∅ 32x34	Intox	0,5	100 (1450)	-40…+100 (-40…+266)

1) other types on request

Float type A

Float type B

Float type C

Float type D

Float type E

Float type F

Transmitter

Type	Output in mA	Supply voltage in VDC	Current in mA	Operating temperature in °C (°F)	Min./max. resistance in Ohm	Approval
INT5333	4…20	8…28	4…20	-20…+85 (-4…+185)	50 6000	non
TMT182	4…20	10…30	4…20	-40…+85	0…400 0…2000	EEx ia C FM IS CSA IS
TMT184	Profibus	10…35	Profibus	-40…+85	10…400 10…2000	EEx ia CII ATEX FM CSA

Order key:

ITA-T1S	Continuous Level Sensing Element						
	Material of guide tube						
	S	316Ti (1.4571)					
	T	Titanium					
	P	Polypropylene					
	Y	others					
		Material of tank connection					
		S	316Ti (1.4571)				
		T	Carbon steel				
		Y	others				
			Type/size of tank connedtion				
			R1	R1/2"			
			N1	1/2" NPT			
			F11	Blind flange DN50 PN16 (DIN 2501)			
			F12	Blind flange DN50 PN32 (DIN 2501)			
			F21	Blind flange 2" 150 lbs RF (/ANSI B 16.5)			
			F22	Blind flange 2" 300 lbs RF (/ANSI B 16.5)			
			Y	others			
				Measuring accuracy			
				10	±10 mm (±0.394")		
				5	±5 mm (±0.197")		
				20	±20 mm (±0.788")		
					Float type		
					A	∅52 mm; min. SG: 0,7 kg/dm³; max. p. 40 bar; mat.: 316Ti	
					B	∅80 mm; min. SG: 0,6 kg/dm³; max. p. 17 bar; mat.: Titanium	
					C	∅80x35 mm; min. SG: 0,5 kg/dm³; max. p. 13 bar; mat.: 316Ti	
					D	∅44x52 mm; min. SG: 0,8 kg/dm³; max. p. 25 bar; mat.: 316Ti	
					E	∅32x34 mm; min. SG: 0,55 kg/dm³; max. p. 10 bar; mat.: Buna N	
					F	∅32x34 mm; min. SG: 0,5 kg/dm³; max. p. 100 bar; mat.: Introx	
					Y	others	
						Transmitter housing	
						A	mat. cast aluminium, IP65 (NEMA 4/4X), standard
						S	mat. 316Ti, IP65 (NEMA 4/4X, standard
						E	mat. aluminium with epoxy finish, IP65 (NEMA 4/4X), EExd II C T6
						Y	other
							Transmitter
							T1 INT5333 non Ex
							T2 TMT182 non Ex
							T3 TMT182 Ex
							T4 TMT184 Profibus

5.2 ITA-T1R Magnetic multi float-switch

Technical data

Max. operation pressure:	40 bar, depending on mounting type and float type
Max. temperature:	100 °C (213 °F)
Min. operation temperature:	depending on the float type
Installation:	vertical; ±30°
Protection class:	IP65 (NEMA 4)
Weight:	depending on version
Min. switch distance:	float diameter + 30 mm

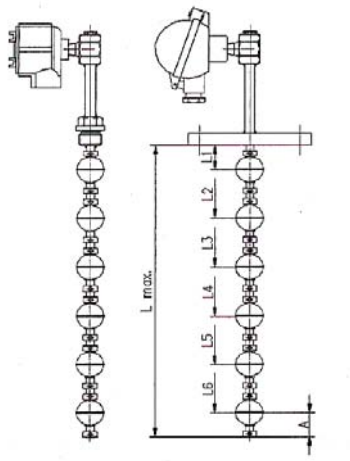

Dimensions:

L1:	min. 30 mm (flanged version) min. 50 mm (threaded version)
L_{max}:	3000 mm
L2-L5:	min. (float diameter + 20 mm)
A:	min. 50 mm
Guide tube ∅:	14 mm

Order codes:

Code	Description
ITA-T1R	Magnetic Multi-Float-Switch
	Material of guide tube
	S 316Ti (1.4571)
	Material of tank mounting
	S 316Ti (1.4571)
	C Carbon steel
	Mounting type
	R1 R1/2"
	N1 1/2" NPT
	F11 Blind flange DN50 PN16 (DIN 2501)
	F12 Blind flange DN50 PN32 (DIN 2501)
	F21 Blind flange 2" 150 lbs RF (/ANSI B 16.5)
	F22 Blind flange 2" 300 lbs RF (/ANSI B 16.5)
	Y others
	Switches: 1 ☐ 2 ☐ 3 ☐ 4 ☐ 5 ☐ 6 ☐
	Switchpoint: _____ _____ _____ _____ _____ _____ (mm)
	Float type
	A ∅52 mm; min. SG: 0,7 kg/dm³; max. p. 40 bar; mat.: 316Ti
	B ∅80 mm; min. SG: 0,6 kg/dm³; max. p. 17 bar; mat.: Titanium
	C ∅80x35 mm; min. SG: 0,5 kg/dm³; max. p. 13 bar; mat.: 316Ti
	D ∅44x52 mm; min. SG: 0,8 kg/dm³; max. p. 25 bar; mat.: 316Ti
	E ∅32x34 mm; min. SG: 0,55 kg/dm³; max. p. 10 bar; mat.: Buna N
	F ∅32x34 mm; min. SG: 0,5 kg/dm³; max. p. 100 bar; mat.: Introx
	Y others
	Connection Box
	S Standard (max. 2 switches); IP65 (NEMA 4)
	D EExd (max. 2 switches); IP65 (NEMA 4)
	K Plastic (max. 6 switches); IP65 (NEMA 4)
	A Aluminium (max. 2 switches); IP65 (NEMA 4)
	Contacts
	S normally open (NO) — U_{max} = 25 V, I_{max} = 150 mA
	O normally closed (NC) — U_{max} = 25 V, I_{max} = 150 mA

Besides the products covered by this brochure, Intra-Automation GmbH also manufactures other high-quality and high precision instruments for industrial measurement tasks. For more information, please contact us (contact details on the backside of this brochure).

Flow Measurement

Itabar-Flow-Meters

Cone Flowmeters

Flow Nozzles

Venturi tubes

Wedge Flowmeters

Level Measurement

Transparent type level gauge

Reflex type level gauge

Tubular type level gauge

Other measurement tasks

Intra-Automation provides a wide range of measurement and control instruments. For more information, please contact us visit our homepage www.intra-automation.com.

Distributor:

De Gidts & Feldman
INSTRUMENTATION & FILTRATION

De Gidts & Feldman BV
The Netherlands
www.dgfg.nl

INTRA-AUTOMATION
MESS- UND REGELINSTRUMENTE / MEASUREMENT AND CONTROL

TÜVRheinland® CERT ISO 9001

Headquarters:
(Germany, world-wide sales)
INTRA-AUTOMATION GmbH
Otto-Hahn-Strasse 20
41515 Grevenbroich
GERMANY

☎ +49-(0)2181-75665-0
+49-(0)2181-64492
info@intra-automation.de

Subsidiary in the Netherlands:
(Sales in the Benelux-States)
BV INTRA-AUTOMATION HTP
Keulsveld 17
4705 RS Roosendaal
THE NETHERLANDS

☎ +31-(0)165-322201
+31-(0)165-322970
info@intra-automation.nl

Please also visit our homepage www.intra-automation.com.