SmartLine

Honeywell

Technical Information

STA700 SmartLine Absolute Pressure Specification 34-ST-03-120, March 2024

Introduction

Part of the SmartLine® family of products, the STA700 and STA70L are suitable for monitoring, control and data acquisition featuring piezoresistive sensor technology combining pressure sensing with on chip temperature compensation capabilities providing high accuracy, stability and performance over a wide range of application pressures and temperatures. The SmartLine family is also fully tested and compliant with Experion ® PKS providing the highest level of compatibility assurance and integration capabilities. SmartLine easily meets the most demanding application needs for pressure measurement applications.

Best in Class Features:

- Accuracies up to 0.065% of span
- Stability up to 0.020% of URL per year for 10 years
- Automatic temperature compensation
- Rangeability up to 100:1
- Response times as fast as 100ms
- Easy to use and intuitive display capabilities
- Intuitive external zero, span, & configuration capability
- Comprehensive on-board diagnostic capabilities
- Integral Dual Seal design for safety based on ANSI/NFPA 70-202 and ANSI/ISA 12.27.0
- Full compliance to SIL 2/3 requirements
- Modular design characters
- Available with additional 4–year warranty

Communications/Output Options:

- HART ® (version 7.0)

Figure 1 – STA700 InLine and Dual Head Absolute Pressure Transmitters feature field-proven piezoresistive sensor technology

Span & Range Limits:

Model	URL mmHgA (mbarA)	LRL mmHgA (mbarA)	Min Span mm HgA (mbarA)
STA725/72S	780 (1040)	0 (0)	50 (66.7)
Model	**psia (barA)**	**psi (barA)**	**psi (barA)**
STA745/74S	500 (35)	0 (0)	5 (0.35)
STA77S	3000 (210)	0 (0)	30 (2.1)

Description

The SmartLine family pressure transmitters are designed around a high performance piezo-resistive sensor. This one sensor actually integrates multiple sensors linking process pressure measurement with on-board static pressure (DP Models) and temperature compensation measurements.

Unique Indication/Display Option

Standard LCD Display Features

- Modular (may be added or removed in the field).
- Supports HART protocol variant.
- 0, 90,180, & 270 degree position adjustments.
- Four configurable screens.
- Standard and custom measurement units available.
- Display calculated flow (square root) value in addition to analog output signal.
- 2 Lines 6 digits PV (9.95H x 4.20W mm) 8 Characters.
- Write protect Indication.
- Built-in Basic Device Configuration through Internal or External Buttons – Range/Engineering Unit/Loop Test /Loop Calibration/Zero /Span Setting.
- Multiple language capabilities (EN, RU).

Diagnostics

SmartLine transmitters all offer digitally accessible diagnostics which aid in providing advanced warning of possible failure events minimizing unplanned shutdowns, providing lower overall operational costs.

System Integration

- SmartLine communications protocols all meet the most current published standards for HART.
- All ST 700 units are Experion tested to provide the highest level of compatibility assurance

Configuration Tools

Integral Three Button Configuration Option

Suitable for all electrical and environmental requirements, SmartLine offers the ability to configure the transmitter and display via three externally accessible buttons when either display option is selected. Zero/span capabilities are also optionally available via these buttons with or without selection of a display option.

Handheld Configuration

SmartLine transmitters feature two-way communication and configuration capability between the operator and the transmitter. All Honeywell transmitters are designed and tested for compliance with the offered communication protocols and are designed to operate with any standards compliant handheld configuration device, such as Honeywell Versatilis Configurator.

Personal Computer Configuration

On a personal computer or laptop, Honeywell Field Device Manager (FDM) Software and FDM Express can be used for managing HART device configurations.

Modular Design

To help contain maintenance & inventory costs, all ST 700 transmitters are modular in design supporting the user's ability to replace meter bodies, standard displays or electronic modules without affecting overall performance. Each meter body is uniquely characterized to provide in-tolerance performance over a wide range of application variations in temperature and pressure.

Modular Features

- Meter body replacement
- Add or remove standard displays
- Add or remove lightning protection (terminal connection)

With no performance effects, *Honeywell's unique modularity results in lower inventory needs and lower overall operating costs.*

Performance Specifications

Reference Accuracy: (conformance to +/-3 Sigma)

Table 1

Model	URL	LRL	Min Span	Maximum Turndown Ratio	Stability (% URL/Year for 10 years)	Reference Accuracy[1,2] % Span Standard
STA725	780 mmHgA (1040 mbarA)	0.0 mmHgA (0.0 mbarA)	50 mmHgA (66.7 mbarA)	15.6:1	0.02	0.065
STA745	500 psia (35 barA)	0.0 mmHgA (0.0 mbarA)	5 psia (0.35 barA)	100:1		
STA72S	780 mmHgA (1040 mbarA)	0.0 mmHgA (0.0 mbarA)	50 mmHgA (66.7 mbarA)	15.6:1		
STA74S	500 psia (35 barA)	0.0 mmHgA (0.0 mbarA)	5 psia (0.35 barA)	100:1		
STA77S	3000 psi (210 barA)	0.0 mmHgA (0.0 mbarA)	30 psia (2.1 barA)	100:1		

Zero and span may be set anywhere within the listed (URL/LRL) range limits

Accuracy at Specified Span and Temperature: (Conformance to +/-3 Sigma)

Table 2

			Accuracy[1,2] (% of Span)				Combined Zero & Span temperature Effect (% Span / 28ºC(50ºF)	
	Model	URL	Reference Turndown	A	B	C (see URL units)	D	E
Standard Accuracy	STA725	780 mmHgA (1040 mbarA)	6.5:1	0.005	0.060	120 (160)	0.075	0.060
	STA745	500 psia (35 barA)	16.7:1			30 (2.1)	0.075	0.015
	STA72S	780 mmHgA (1040 mbarA)	4.3:1			180 (240)	0.075	0.120
	STA74S	500 psia (35 barA)	16.7:1			30 (2.1)	0.075	0.020
	STA77S	3000 psi (210 barA)	5:1			600 (42)	0.075	0.015
			Turn Down Effect				Temp Effect	
			$\pm[A+B] \quad if\ Span \geq C$ $\pm\left[A+B\left(\frac{C}{Span}\right)\right] \quad if\ Span < C$				$\pm[D+E\left(\frac{URL}{Span}\right)]$	

Total Performance (% of Span):

Total Performance Calculation: $= +/- \sqrt{(\text{Accuracy})^2 + (\text{Temperature Effect})^2}$

Total Performance Examples (for comparison): (standard accuracy, 5:1 Turndown, +/-50 ºF (28ºC) shift)

STA725 @ 156 mmHgA: 0.381% of span

STA745 @ 100 psia: 0.163% of span

STA72S @ 156 mmHgA: 0.679% of span

STA74S @ 100 psia: 0.187% of span

STA77S @ 600 psia: 0.163% of span

Typical Calibration Frequency:

Calibration verification is recommended every two (2) years

Notes:

1. Terminal Based Accuracy - Includes combined effects of linearity, hysteresis, and repeatability. Analog output adds 0 .006% of span.
2. For zero based spans and reference conditions of: 25ºC (77ºF), 10 to 55% RH, and 316 Stainless Steel barrier diaphragm.

Operating Conditions – All Models

Parameter	Reference Condition		Rated Condition		Operative Limits		Transportation and Storage	
	°C	°F	°C	°F	°C	°F	°C	°F
Ambient Temperature[1]	25±1	77±2	-40 to 85	-40 to 185	-40 to 85	-40 to 185	-55 to 120	-67 to 248
Meter Body Temperature								
STA725 / STA72S	25±1	77±2	See Figure 2		See Figure 2		-55 to 125	-67 to 257
STA745, 74S, 77S	25±1	77±2	-40 to 110	-40 to 230	-40 to 125	-40 to 257	-55 to 125	-67 to 257
Humidity %RH	10 to 55		0 to 100		0 to 100		0 to 100	
Vacuum Region - Minimum Pressure STA725, 72S, 745, 74S, 77S	See Figure 2. Operate within specifications above 25 mmHgA (33 mbarA). Short term[2] exposure to full vacuum will not result in damage.							
Supply Voltage, Current, and Load Resistance	10.8 to 42.4 Vdc at terminals (IS versions limited to 30 VDC) 0 to 1,440 ohms (as shown in Figure 3)							
Maximum Allowable Working Pressure (MAWP) [3], [4]	STA725, 72S = 780 mmHgA (1,040 mbarA) STA745, 74S = 500 psia (35 barA) STA77S = 3,000 psia (210 barA)							

[1] LCD Display operating temperature -20°C to +70°C Storage temperature -30°C to 80°C.
[2] Short term equals 2 hours at 70°C (158°F).
[3] Units can withstand overpressure of 1.5 x MAWP without damage.
[4] Consult factory for MAWP of ST 700 transmitters with CRN approval.
[5] Silicone minimum temperature rating is -40°C (-40°F). CTFE minimum temperature rating is -40°C (-40°F).

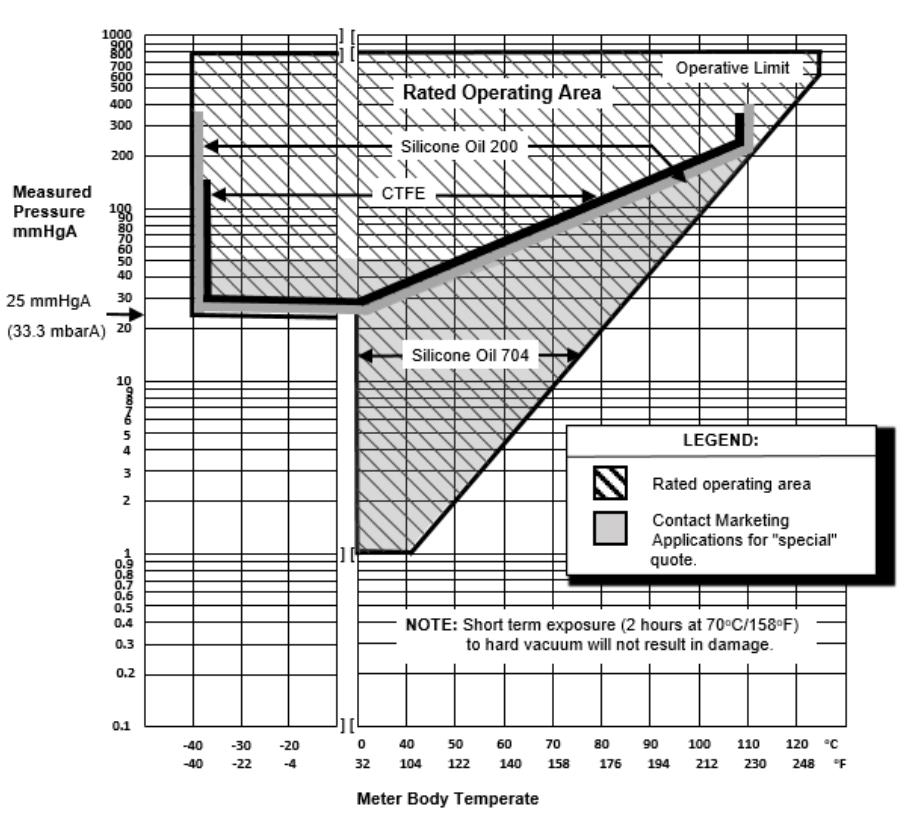

Figure 2 - Measured pressure versus meter body temperature chart for ST 700 Dual Head and Inline models

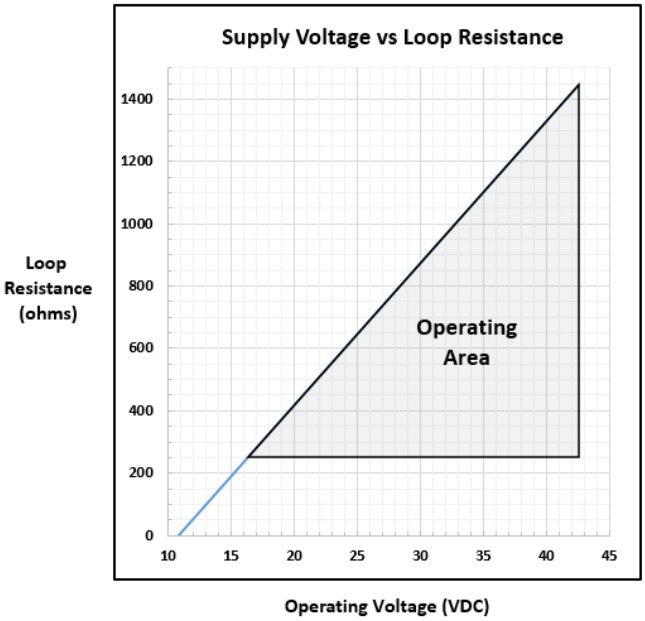

A minimum of 250 ohms loop resistance is required to support field communicator, where
Loop resistance is the summation of barrier resistance, wire resistance and receiver resistance

Maximum loop resistance
RLmax = 45.6 x (Power Supply Voltage - 10.8)

Figure 3 - Supply voltage and loop resistance chart & calculations

Performance Under Rated Conditions – All Models

Parameter	Description
Analog Output **Digital Communications**:	Two-wire, 4 to 20 mA HART 7 protocol
HART Output Failure Modes	**Honeywell Standard** / **NAMUR NE 43 Compliance** **Normal Limits:** 3.8 – 20.8 mA / 3.8 – 20.5 mA **Failure Mode:** ≤ 3.6 mA and ≥ 21.0 mA / ≤ 3.6 mA and ≥ 21.0 mA
Supply Voltage Effect	0.005% of span per volt.
Transmitter Turn on Time (includes power up & test algorithms)	2.5 seconds
Response Time (delay + time constant)	100ms
Damping Time Constant	Adjustable from 0 to 32 seconds in 0.1 increments. **Default Value:** 0.5 seconds
Vibration Effect	Less than +/- 0.1% of URL w/o damping Per IEC60770-1 field or pipeline, high vibration level (10-2000Hz: 0.21 displacement/3g max acceleration)
Electromagnetic Compatibility	Meets IEC61326-3-1
Lightning Protection Option	**Leakage Current:** 10uA max @ 42.4VDC 93C **Impulse rating:** 8/20us 5000A (>10 strikes) 10000A (1 strike min.) 10/1000us 200A (> 300 strikes)

Materials Specifications (see model selection guide for availability/restrictions with various models)

Parameter	Description
Barrier Diaphragms Material	**STA7x5 Dual Head**: 316L SS, Hastelloy® C-276[2] **STA7xS Inline**: 316L SS, Hastelloy C-276[2]
Process Head Material	**STA700 Dual Head**: Carbon Steel (Zinc Plated)[5], 316 SS[4], Hastelloy® C-276[6] **STA700 Inline:** 316L SS[4], Hastelloy® C-276[6]
Vent/Drain Valves & Plugs [1]	**STA700 Dual Head:**316 SS[4], Hastelloy® C-276[2] **STA700 Inline:** N/A
Head Gaskets	**STA700 Dual Head:** Glass-filled PTFE standard. Viton® and graphite are optional. **STA700 Inline:** N/A
Meter Body Bolting	**STA700 Dual Head:** Carbon Steel (Zinc plated) standard. Options include 316 SS, NACE A286 SS bolts and nuts or NACE A286 SS bolts nuts and Super Duplex **STA700 Inline:** N/A
Mounting Bracket	Carbon Steel (Zinc-plated) or 304 or 316 Stainless Steel. See Figures 4 & 5
Fill Fluid	Silicone 200, CTFE (Chlorotrifluoroethylene)
Electronic Housing	Pure Polyester Powder Coated Low Copper (<0.4%) – Aluminum. Meets Type 4X / IP66 / IP67. All stainless-steel housing is optional. Cover O ring material: Silicone.
Process Connections	**STA700 Dual Head:** ½ -inch NPT (female) **STA700 Inline:** ½ -inch NPT (female), ½ -inch NPT male, 9/16 Aminco. G½ -B Male Thread
Wiring	Accepts up to 16 AWG (1.5 mm diameter).
Dimensions	See Figure 4 and Figure 5
Net Weight	**STA700 Dual Head:** 8.3 pounds (3.8 Kg). **STA700 InLine:** 3.6 pounds (1.6 Kg) with Aluminum Housing

[1] Vent/Drains are sealed with Teflon®

[2] Hastelloy® C-276 or UNS N10276

[4] Supplied as 316 SS or as Grade CF8M, the casting equivalent of 316 SS.

[5] Carbon Steel heads are zinc-plated and not recommended for water service due to hydrogen migration. For that service, use 316 stainless steel wetted Process Heads.

[6] Hastelloy® C-276 or UNS N10276. Supplied as indicated or as Grade CW12MW, the casting equivalent of Hastelloy® C-276

Communications Protocols & Diagnostics

HART Protocol

Version: HART 7

Standard Diagnostics

ST 700 top level diagnostics are reported as either critical or non-critical and readable via the DD/DTM/FDI tools or Standard integral display. Some of the diagnostics are listed below:

Critical Diagnostics

- Electronics Module Fault.
- Meter body Memory Corruption.
- Config Data Corruption.
- Electronics Module Diagnostics Failure.
- Meter body Critical Failure.
- Sensor Communication Timeout.

Non-Critical Diagnostics

- Electronics Module Fault.
- Display Failure.
- Electronics Module Comm Failure.
- Meter body Excess Correct.
- Sensor Over Temperature.
- Fixed Current Mode.
- PV Out of Range.
- No DAC Compensation.

Refer to the product user manual for comprehensive list of diagnostics and details.

Hazardous Area Certifications

MSG CODE	AGENCY	TYPE OF PROTECTION	COMM. OPTION	ELECTRICAL PARAMETERS	AMBIENT TEMP (Ta)
A	FM Approvals™ USA	Explosionproof: Class I, Division 1, Groups A, B, C, D; Dust Ignition Proof: Class II, III, Division 1, Groups E, F, G; T6..T5 Class I, Zone 0/1, AEx db IIC T6..T5 Ga/Gb Class II, Zone 21, AEx tb IIIC T95° Db	All	Note 1	T5: -50 ºC to 85ºC T6: -50 ºC to 65ºC
		Intrinsically Safe: Class I, II, III, Division 1, Groups A, B, C, D, E, F, G: T4 Class I, Zone 0, AEx ia IIC T4 Ga Class I, Zone 0, AEx ic IIC T4 Ga Ex ia IIC T4 Ga; Ex ic IIC T4 Gc	4-20 mA / HART	Note 2a	-50 ºC to 70ºC
		Nonincendive: Class I, Division 2, Groups A, B, C, D locations, T4 Class I, Zone 2, AEx nA IIC T4 Gc	4-20 mA / HART	Note 1	-50 ºC to 85ºC
		Enclosure: Type 4X/ IP66/ IP67	All	All	-
		STANDARDS: FM Class 3600:2011; FM Class 3610: 2010; FM Class 3611: 2004; FM Class 3615: 2006; FM Class 3616: 2011; FM Class 3810: 2005; ANSI/ISA 60079-0: 2013; ANSI/UL 60079-1: 2015; ANSI/UL 60079-11: 2014; ANSI/ISA 60079-15: 2012; ANSI/UL 60079-26: 2017; ANSI/UL 60079-31: 2015; ANSI/NEMA 250: 2003; ANSI/ IEC 60529: 2004			
B	Canadian Standards Association (CSA) USA and Canada	**Explosion Proof:** Class I, Division 1, Groups A, B, C, D; Class II, Division 1, Groups E, F, G; Class III, Division 1, T6..T5 Class I Zone 1 AEx db IIC T6..T5 Ga/Gb Ex db IIC T6..T5 Ga/Gb Zone 22 AEx tb IIIC T95° Db Ex tb IIIC T95° Db	All	Note 1	T5: -50°C TO 85°C T6: -50°C TO 65°C
		Intrinsically Safe: Class I, II, III, Division 1, Groups A, B, C, D; Class II, Division 1, Groups E, F, G; Class III, Division 1, T4 Class I Zone 0, AEx ia IIC T4 Ga Class I Zone 2, AEx ic IIC T4 Gc Ex ia IIC T4 Ga Ex ic IIC T4 Gc	4-20 mA / HART	Note 2	-50°C TO 70°C
		Nonincendive: Class I, Division 2, Groups A, B, C, D; Class II, Division 2, Groups F, G; Class III, Division 2, T4 Class I Zone 2 AEx nA IIC T4 Gc Ex ec IIC T4 Gc	4-20 mA / HART	Note 1	-50°C to 85°C
		Enclosure: Type 4X/ IP66/ IP67	All	All	-
		STANDARDS: CSA C22.2 No. 0-10; CSA C22.2 No. 94-M91; CSA C22.2 No. 25-1966; CSA C22.2 No. 30-M1986; CSA C22.2 No. 142-M1987; CSA C22.2 No. 157-92; CSA C22.2 No. 213-M1987; CSA-C22.2 No. 60529:05; CSA-C22.2 No. 60079-0:11; CSA-C22.2 No. 60079-1:11; CSA-C22.2			

MSG CODE	AGENCY	TYPE OF PROTECTION	COMM. OPTION	ELECTRICAL PARAMETERS	AMBIENT TEMP (Ta)
		No. 60079-11:11; CSA-C22.2 No. 60079-15:12; CSA-C22.2 No. 60079-31:12; ISA 12.12.01-2010; ISA 60079-0: 2009; ISA 60079-11: 2011; ISA 60079-15: 2009; ISA 60079-26: 2008; ISA-60079-27:2007 (12.02.04)-2006 (R2011); UL 913 Ed. 6; UL 916:1998; ANSI/ISA-12.27.01-2011			
C	ATEX	**Flameproof: SIRA 12ATEX2233X** II 1/2 G Ex db IIC T6..T5 Ga/Gb II 2 D Ex tb IIIC T95°C…T120°C Db	All	Note 1	T5: -50°C TO 85°C T6: -50°C TO 65°C
		Intrinsically Safe: SIRA 12ATEX2233X II 1 G Ex ia IIC T4 Ga II 2 D Ex ia IIIIC T125°C Db	4-20 mA / HART	Note 2	-50°C TO 70°C
		Zone 2, Increase Safety: SIRA 12ATEX4234X II 3 G Ex ec IIC T4 Gc	4-20 mA / HART	Note 1	-50°C TO 85°C
		Zone 2, Intrinsically Safe: SIRA 12ATEX4234X II 3 G Ex ic IIC T4 Gc	4-20 mA / HART	Note 2	-50°C TO 85°C
		Enclosure: IP66/ IP67	All	All	-
		STANDARDS: EN 60079-0: 2018; EN 60079-1: 2014; EN 60079-7: 2015+A1: 2018; EN 60079-11: 2012; EN 60079-26: 2015; EN 60079-31: 2014			
	UKEX	**Flameproof: CSAE 22UKEX1021X** II 1/2 G Ex db IIC T6..T5 Ga/Gb II 2 D Ex tb IIIC T95°C…T120°C Db	All	Note 1	T5: -50°C TO 85°C T6: -50°C TO 65°C
		Intrinsically Safe: CSAE 22UKEX1021X II 1 G Ex ia IIC T4 Ga II 2 D Ex ia IIIIC T125°C Db	4-20 mA / HART	Note 2	-50°C TO 70°C
		Zone 2, Increase Safety: CSAE 22UKEX1008X II 3 G Ex ec IIC T4 Gc	4-20 mA / HART/	Note 1	-50°C TO 85°C
		Zone 2, Intrinsically Safe: CSAE 22UKEX1008X II 3 G Ex ic IIC T4 Gc	4-20 mA / HART	Note 2	-50°C TO 85°C
		Enclosure: IP66/ IP67	All	All	-
		STANDARDS: EN 60079-0: 2018; EN 60079-1: 2014; EN 60079-7: 2015+A1: 2018; EN 60079-11: 2012; EN 60079-26: 2015; EN 60079-31: 2014			
D	IECEx World	**Flameproof: IECEx SIR 12.0100X** Ex db IIC T6..T5 Ga/Gb Ex tb IIIC T95°C…T120°C Db	All	Note 1	T5: -50°C TO 85°C T6: -50°C TO 65°C

MSG CODE	AGENCY	TYPE OF PROTECTION	COMM. OPTION	ELECTRICAL PARAMETERS	AMBIENT TEMP (Ta)
		Intrinsically Safe: IECEx SIR 12.0100X Ex ia IIC T4 Ga Ex ia IIIC T125ºC Db	4-20 mA / HART	Note 2	-50ºC TO 70ºC
		Zone 2, Increase Safety: IECEx SIR 12.0100X Ex ec IIC T4 Gc	4-20 mA / HART	Note 1	-50ºC TO 85ºC
		Zone 2, Intrinsically Safe: IECEx SIR 12.0100X Ex ic IIC T4 Gc	4-20 mA / HART	Note 2	-50ºC TO 85ºC
		Enclosure: IP66/ IP67	All	All	-
		STANDARDS: IEC 60079-0: 2017; IEC 60079-1: 2014; IEC 60079-7: 2017; IEC 60079-11: 2011; IEC 60079-26: 2014; IEC 60079-31: 2013			

E	SAEx South Africa	**Flameproof :** Ex d IIC T6…T5 Ga/Gb Ex tb IIIC T95°C…T120°C Db	All	Note 1	T5: -50°C TO 85°C T6: -50°C TO 65°C
		Intrinsically Safe: Ex ia IIC Ga T4	4-20 mA / HART	Note 2	-50°C TO 70°C
		Zone 2, Increase Safety: II 3 G Ex ec IIC T4 Gc	4-20 mA / HART	Note 1	-50°C TO 85°C
		Zone 2, Intrinsically Safe: Ex ic IIC T4 Gc	4-20 mA / HART	Note 2	-50°C TO 85°C
		Enclosure: IP66/ IP67	All	All	-
F	INMETRO Brazil	**Flameproof:** Ex db IIC T6..T5 Ga/Gb Ex tb IIIC T95°C…T120°C Db	All	Note 1	T5: -50°C TO 85°C T6: -50°C TO 65°C
		Intrinsically Safe: Ex ia IIC T4 Ga	4-20 mA / HART	Note 2	-50°C TO 70°C
		Zone 2, Increase Safety: II 3 G Ex ec IIC T4 Gc	4-20 mA / HART	Note 1	-50°C TO 85°C
		Zone 2, Intrinsically Safe: Ex ic IIC T4 Gc	4-20 mA / HART	Note 2	-50°C TO 85°C
		Enclosure : IP 66/67	All	All	-
G	NEPSI CHINA	**Flameproof:** Ex db IIC T6..T5 Ga/Gb Ex tb IIIC T 95°C Db	All	Note 1	T5: -50°C TO 85°C T6: -50°C TO 65°C
		Intrinsically Safe: Ex ia IIC T4 Ga	4-20 mA / HART	Note 2	-50°C TO 70°C
		Zone 2, Increase Safety: II 3 G Ex ec IIC T4 Gc	4-20 mA / HART	Note 1	-50°C TO 85°C
		Zone 2, Intrinsically Safe: Ex ic IIC T4 Gc	4-20 mA / HART	Note 2	-50°C TO 85°C
		Enclosure : IP 66/67	All	All	-
I	EAC Russia, Belarus and Kazakhstan	**Flameproof:** Ga/Gb Ex d IIC T6..T5 Ex tb IIIC Db T 85°C	All	Note 1	T5: -50°C TO 85°C T6: -50°C TO 65°C
		Intrinsically Safe: Ga Ex ia IIC T4 X	4-20 mA / HART	Note 2	-50°C TO 70°C
		Zone 2, Non Sparking: 2 Ex nA IIC T4 Gc X	4-20 mA / HART	Note 1	-50°C TO 85°C
		Zone 2, Intrinsically Safe: Ga Ex ic IIC T4 X	4-20 mA / HART	Note 2	-50°C TO 85°C

		Enclosure : IP 66/67	All	All	
J	**CCoE INDIA**	**Flameproof:** Ex d IIC T6..T5 Ga/Gb	All	Note 1	T5: -50°C TO 85°C T6: -50°C TO 65°C
		Intrinsically Safe: Ex ia IIC T4 Ga	4-20 mA / HART	Note 2	-50°C TO 70°C
		Non Sparking Ex nA IIC T4 Gc	4-20 mA / HART	Note 1	-50°C TO 85°C
		Enclosure: IP66/ IP67	All	All	-
K	**UATR UKRAINE**	**Flameproof:** II 1/2 G Ex db IIC T6..T5 Ga/Gb II 2 D Ex tb IIIC T95°C…T120°C Db	All	Note 1	T5: -50°C TO 85°C T6: -50°C TO 65°C
		Intrinsically Safe: II 1 G Ex ia IIC T4 Ga	4-20 mA / DE/ HART	Note 2	-50°C TO 70°C
		Enclosure: IP66/ IP67	All	All	-

Notes:

1. Operating Parameters:
   Voltage = 11 to 42 VDC Current = 4-20 mA Normal

2. Intrinsically Safe Entity Parameters
   a. Analog/ HART Entity Values:

   Vmax = Ui = 30V Imax = Ii = 105mA Ci = 4.2nF Li = 984 uH Pi = 0.9W

   Transmitter with Terminal Block Revision E or Later

   Vmax = Ui = 30V Imax= Ii = 225mA Ci = 4.2nF Li = 0 Pi = 0.9W

   Note : Transmitter with Terminal Block Revision E or later
   The revision is on the label that is on the module. There will be two lines of text on the label:
   - First is the Module Part #: 50049839-001 or 50049839-002
   - Second line has the supplier information, along with the REVISION:

   XXXXXXX-EXXXX, THE "X" is production related, THE POSITION of the "E" IS THE REVISION.

Other Certification Options

Materials

- NACE MRO175, MRO103, ISO15156

SIL 2/3 Certification	IEC 61508 SIL 2 for non-redundant use and SIL 3 for redundant use according to EXIDA and TÜV Nord Sys Tec GmbH & Co. KG under the following standards: IEC61508-1: 2010; IEC 61508-2: 2010; IEC61508-3: 2010.

Mounting & Dimensional Drawings

Reference Dimensions: $\frac{\text{millimeters}}{\text{inches}}$

Mounting Configurations (Dual head design)

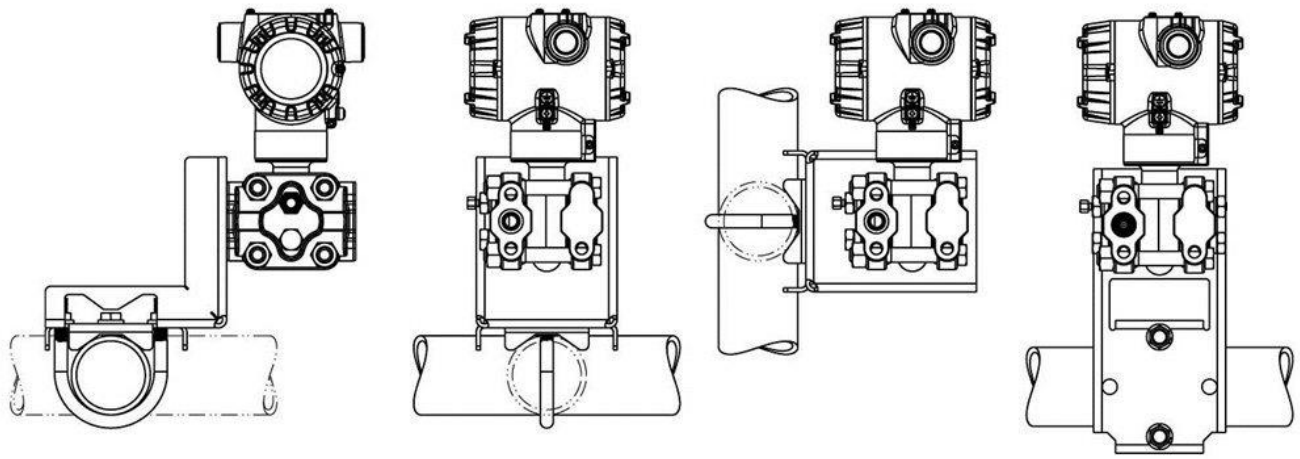

Dimensions (Dual head design)

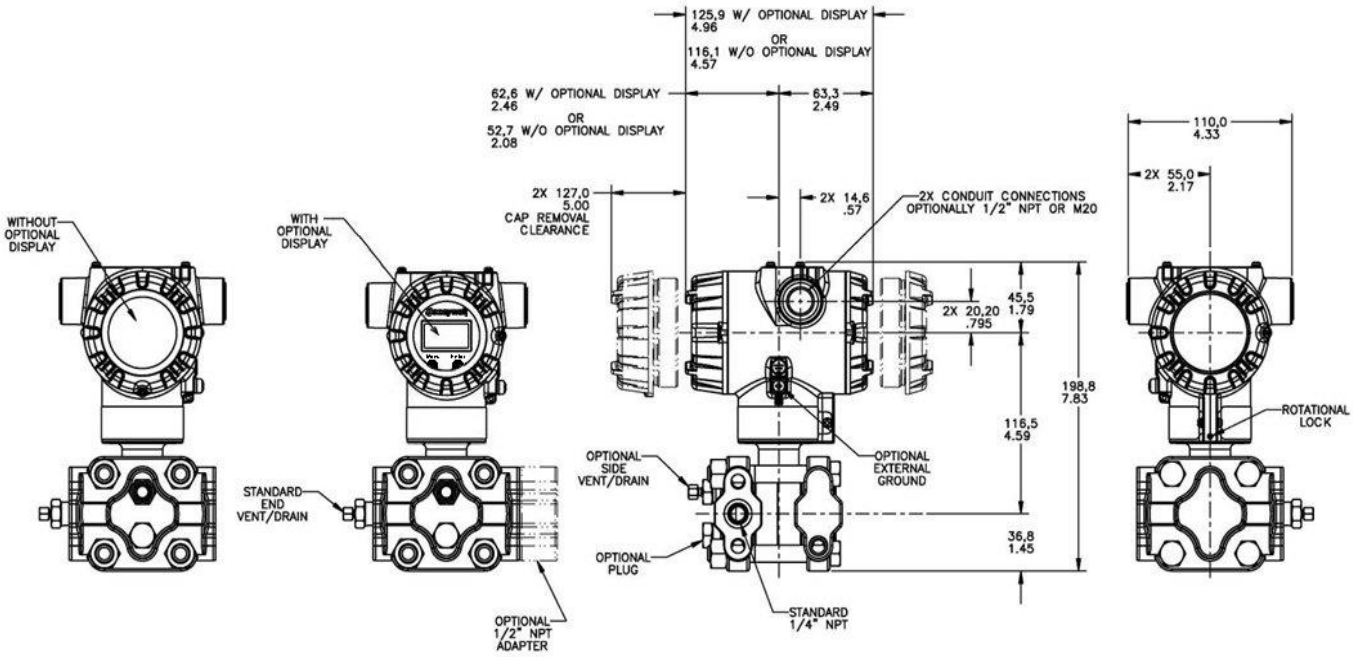

Figure 4 - – Typical mounting dimensions of STA725 & STA745 for reference

Reference Dimensions: $\frac{\text{millimeters}}{\text{inches}}$

Mounting Configurations (Inline Designs)

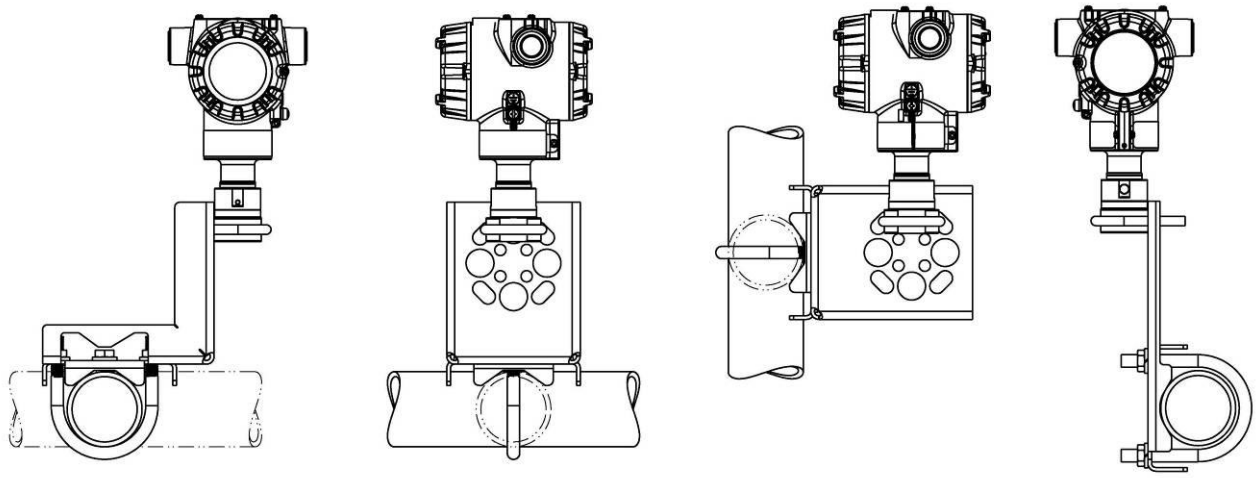

Dimension (Inline Design)

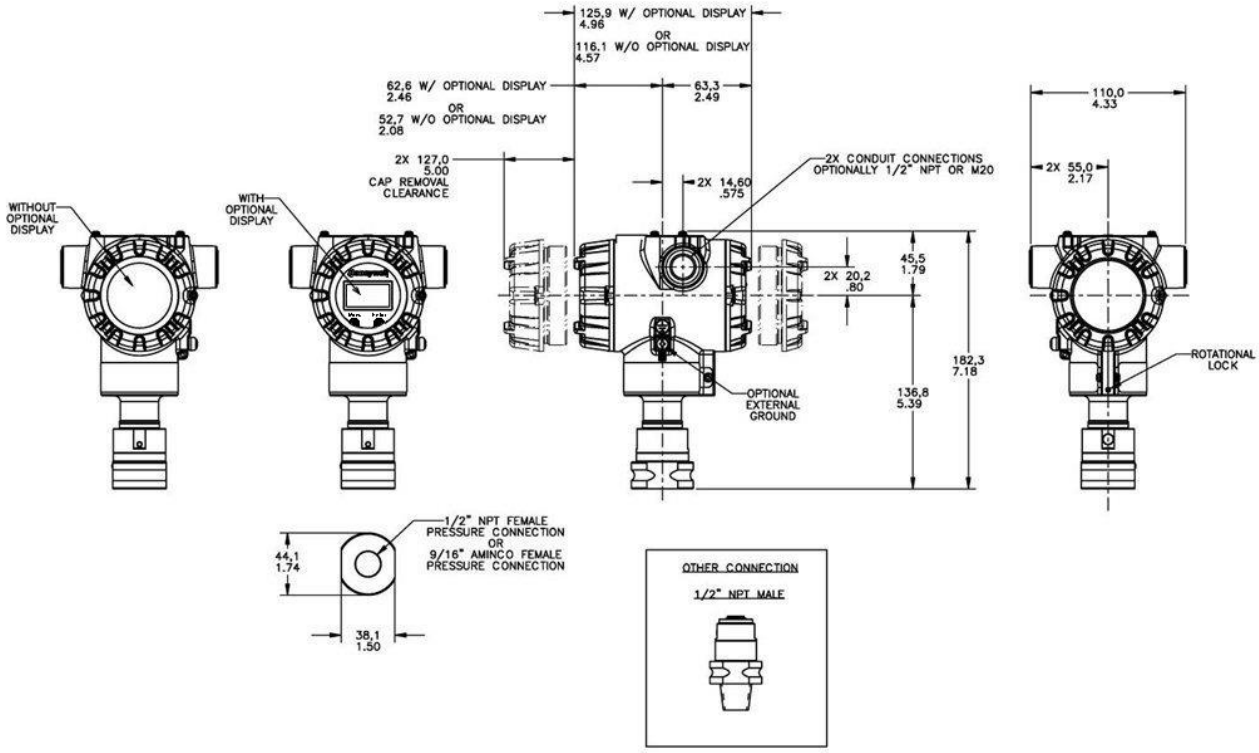

Figure 5 – Typical mounting dimensions of STA72S, STA74S, & STA77S for reference

Model Selection Guide

Model Selection Guides are subject to change and are inserted into the specifications as guidance only.

Model STA700
Absolute Pressure Transmitters

Model Selection Guide
34-ST-16-120, Issue 18

Instructions: Make selections from all Tables using column below the proper arrow. Asterisk indicates availability. Letter (a) refers to restrictions highlighted in the restrictions table. Tables delimited with dashes.
List Price: Price equals the sum of prices for all selections made.

Key	I	II	III	IV	V	VI	VII	VIII		IX
STA7_ _	_ _ _ _ _ _	_	_	_ _ _	_ _ _	_	_ _ _ _	_ _, _ _, _ _		0 0 0 0

KEY NUMBER	URL/Max Span	LRL	Min Span	Units	Selection	Availability	
Absolute Dual Head	780 (1040)	0 (0)	50 (65.0)	mm HgA (mbarA)	STA725	↓	
	500 (35)	0 (0)	5 (.35)	psia (barA)	STA745	↓	
Absolute In-Line	780 (1040)	0 (0)	50 (65.0)	mm HgA (mbarA)	STA72S		↓
	500 (35)	0 (0)	5 (.35)	psia (barA)	STA74S		↓
	3000 (210)	0 (0)	30 (2.1)	psia (barA)	STA77S		↓

TABLE I	METER BODY SELECTIONS				
a. Process Head & Diaphragm Materials	Process Head/Reference Head Mat'l[1b]	Barrier Diaphragm Material			
	Plated Carbon Steel /Plated Carbon Steel	316L SS	A _ _ _ _ _	*	
		Hastelloy® C - 276	B _ _ _ _ _	*	
	316 Stainless Steel /316 Stainless Steel[1c]	316L SS	E _ _ _ _ _	*	*
		Hastelloy C - 276	F _ _ _ _ _	*	*
	Hastelloy C - 276 /316 Stainless Steel	Hastelloy C - 276	J _ _ _ _ _	*	*
b. Fill Fluid	Silicone Oil 200		_ 1 _ _ _ _	*	*
	Fluorinated Oil CTFE		_ 2 _ _ _ _	*	*
c. Process Connection	Size/Type	Material			
	9/16" Aminco	Same as Process Head	_ _ A _ _ _		*
	1/2" NPT (female)	Same as Process Head [1a]	_ _ G _ _ _	*	*
	1/2" NPT (male)	Same as Process Head	_ _ H _ _ _		*
	G 1/2 B Threaded Fitting	Same as Process Head	_ _ B _ _ _		*
	M20 (male)	Same as Process Head	_ _ N _ _ _		*
d. Bolt/Nuts Materials	None		_ _ _ 0 _ _		*
	Carbon Steel		_ _ _ C _ _	*	
	316 SS		_ _ _ S _ _	*	
	Grade 660 (NACE A286) with NACE 304 SS Nuts		_ _ _ N _ _	*	
	Grade 660 (NACE A286) Bolts & Nuts		_ _ _ K _ _	p	
	Super Duplex		_ _ _ D _ _	p	
e. Vent/Drain Type/Location	Head Type	Vent Type	Vent Location	Vent Material	
	None	None	None	None	_ _ _ _ 0 _		*
	Single Ended	None	None	None	_ _ _ _ 1 _	*	
	Single Ended	Std Vent	Side	Matches Head Material[1]	_ _ _ _ 2 _	*	
	Single Ended	Center Vent	Side	Stainless Steel Only	_ _ _ _ 3 _	t	
	Dual Ended	Std Vent	End	Matches Head Material[1]	_ _ _ _ 4 _	*	
	Dual Ended	Center Vent	End	Stainless Steel Only	_ _ _ _ 5 _	t	
	Dual Ended	Std Vent/ Plug	Side/End	Matches Head Material[1]	_ _ _ _ 6 _	*	
f. Gasket Materials	None				_ _ _ _ _ 0		*
	Teflon® or PTFE (Glass Filled)				_ _ _ _ _ A	*	
	Viton®				_ _ _ _ _ B	*	
	Graphite				_ _ _ _ _ C	*	

[1] Except Carbon Steel Heads shall use 316SS Vent/Drain & Plugs
[1a] STA725,745 supplied via 1/2" flange adapter same material as process head except carbon steel shall use 316 SS
[1b] Reference head available only with Dual head models. In-line models supplied with process head only
[1c] When selected for In-Line Gage models the Process Head / Bonnet is supplied in Dual Certified SS316/316L

STANDARD	REVERSED	90°/STANDARD
SELECTION 1[4]	SELECTION 2	SELECTION 3

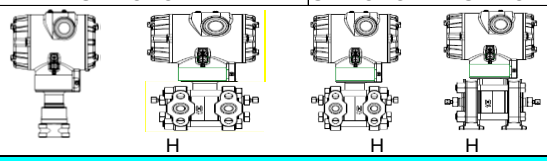

STA72S
STA74S
STA77S
STA725
STA745

TABLE II	Meter Body & Connection Orientation				
Head/Connect Orientation	Standard	High Side Left, Ref Side Right[2] / Std Head Orientation	1	*	*
	Reversed	Ref Side Left, High Side Right[2]	2	*	
	90/Standard	High Side Left, Ref Side Right[2] / 90[0] Head Rotation	3	h	

TABLE III	AGENCY APPROVALS			
Approvals	No Approvals Required	0	*	*
	<FM> Explosion proof, Intrinsically Safe, Non-incendive, & Dustproof	A	*	*
	CSA Explosion proof, Intrinsically Safe, Non-incendive, & Dustproof	B	*	*
	ATEX Explosion proof, Intrinsically Safe & Non-incendive	C	*	*
	IECEx Explosion proof, Intrinsically Safe & Non-incendive	D	*	*
	SAEx Explosion proof, Intrinsically Safe & Non-incendive	E	*	*
	INMETRO Explosion proof, Intrinsically Safe & Non-incendive	F	*	*
	NEPSI Explosion proof, Intrinsically Safe & Non-incendive	G	*	*
	EAC-Customs Union(Russia,Belarus and Kazakhstan)EX Approval Flameproof,Intrinsically Safe	I	*	*
	CCoE Explosion proof, Intrinsically Safe & Non-incendive	J	*	*
	UATR Flameproof, Intrinsically Safe & Dustproof	K	*	*

TABLE IV	TRANSMITTER ELECTRONICS SELECTIONS					
	Material	Connection	Lightning Protection			
a. Electronic Housing Material & Connection Type	Polyester Powder Coated Aluminum	1/2 NPT	None	A _ _	*	*
	Polyester Powder Coated Aluminum	M20	None	B _ _	*	*
	Polyester Powder Coated Aluminum	1/2 NPT	Yes	C _ _	*	*
	Polyester Powder Coated Aluminum	M20	Yes	D _ _	*	*
	316 Stainless Steel (Grade CF8M)	1/2 NPT	None	E _ _	*	*
	316 Stainless Steel (Grade CF8M)	M20	None	F _ _	*	*
	316 Stainless Steel (Grade CF8M)	1/2 NPT	Yes	G _ _	*	*
	316 Stainless Steel (Grade CF8M)	M20	Yes	H _ _	*	*
b. Output/ Protocol	Analog Output	Digital Protocol				
	4-20mA dc	HART Protocol		_ H _	*	*
	Indicator	Ext Zero,Span & Config Buttons	Languages			
c. Customer Interface Selections	None	None	None	_ _ 0	*	*
	None	Yes (Zero/Span Only)	None	_ _ A	*	*
	Standard(w/Internal Zero,Span&Config Buttons)	None	EN, RU	_ _ S	*	*
	Standard(w/Internal Zero,Span&Config Buttons)	Yes	EN, RU	_ _ T	*	*

TABLE V	CONFIGURATION SELECTIONS					
a. App S/W	Diagnostics					
	Standard Diagnostics			1 _ _	*	*
b. Output Limit, Failsafe & Write Protect Settings	Write Protect	Fail Mode	High & Low Output Limits[3]			
	Disabled	High> 21.0mAdc	Honeywell Std (3.8 - 20.8 mAdc)	_ 1 _	*	*
	Disabled	Low< 3.6mAdc	Honeywell Std (3.8 - 20.8 mAdc)	_ 2 _	*	*
	Enabled	High> 21.0mAdc	Honeywell Std (3.8 - 20.8 mAdc)	_ 3 _	*	*
	Enabled	Low< 3.6mAdc	Honeywell Std (3.8 - 20.8 mAdc)	_ 4 _	*	*
c. General Configuration	General Configuration					
	Factory Standard			_ _ S	*	*
	Customer Configuration (Unit Data Required)			_ _ C	*	*

[2] Left side/Right side as viewed from the customer connection perspective

[3] NAMUR Output Limits 3.8 - 20.5mAdc can be configured by the custom

[4] Process Connections will vary on In -Line models

TABLE VI	CALIBRATION & ACCURACY SELECTIONS			STA72S / STA74S / STA77S	STA725	STA745
	Accuracy	Calibrated Range	Calibration Qty			
Accuracy and Calibration	Standard	Factory Std	Single Calibration	A	*	*
	Standard	Custom (Unit Data Required)	Single Calibration	B	*	*

TABLE VII	ACCESSORY SELECTIONS				
	Bracket Type	Material			
a. Mounting Bracket	None	None	0 _ _ _	*	*
	Angle Bracket	Carbon Steel	1 _ _ _	*	*
	Angle Bracket	304 SS	2 _ _ _	*	*
	Angle Bracket	316 SS	3 _ _ _	*	*
	Marine Approved Bracket	304 SS	4_ _ _	*	
	Flat Bracket	Carbon Steel	5 _ _ _	*	*
	Flat Bracket	304 SS	6 _ _ _	*	*
	Flat Bracket	316 SS	7 _ _ _	*	*
b. Customer Tag	Customer Tag Type				
	No customer tag		_ 0 _ _	*	*
	One Wired Stainless Steel Tag (Up to 4 lines 26char/line)		_ 1 _ _	*	*
c. Unassembled Conduit Plugs & Adapters	Unassembled Conduit Plugs & Adapters				
	No Conduit Plugs or Adapters Required		_ _ A0	*	*
	1/2 NPT Male to 3/4 NPT Female 316 SS Certified Conduit Adapter		_ _ A2	n	n
	1/2 NPT 316 SS Certified Conduit Plug		_ _ A6	n	n
	M20 316 SS Certified Conduit Plug		_ _ A7	m	m

TABLE VIII	OTHER Certifications & Options: (String in sequence comma delimited (XX, XX, XX,….)				
Certifications & Warranty	None - No additional options	00	*	*	
	NACE MR0175; MR0103; ISO15156 Process wetted parts only	FG	*	*	b
	NACE MR0175; MR0103; ISO15156 Process wetted and non-wetted parts	F7	c	c	
	Marine (DNV,ABS,BV,KR,LR)	MT	d	d	
	EN10204 Type 3.1 Material Traceability	FX	*	*	
	Certificate of Conformance	F3	*	*	b
	Calibration Test Report & Certificate of Conformance	F1	*	*	
	Certificate of Origin	F5	*	*	
	FMEDA(SIL 2/3) Certification	FE	j	j	
	Over-Pressure Leak Test Certificate (1.5X MAWP)	TP	*	*	
	Cert Clean for O_2 or CL_2 service per ASTM G93	OX	e	e	
	PM Certification[5]	PM	*	*	
	Extended Warranty Additional 1 year	01	*	*	
	Extended Warranty Additional 2 years	02	*	*	b
	Extended Warranty Additional 3 years	03	*	*	
	Extended Warranty Additional 4 years	04	*	*	

TABLE IX	Manufacturing Specials			
Factory	Factory Identification	0 0 0 0	*	*

RESTRICTIONS

Restriction Letter	Available Only with		Not Available with	
	Table	Selection(s)	Table	Selection(s)
b	Select Only one option from this group			
c	Id	_ _ _ 0,N,K,D _ _		
d	Iva	C, D, G, H _ _	VIIa	1, 2, 3, 5, 6, 7 _ _ _
e	Ib	_ 2 _ _ _ _		
h			Ie	4,5,6
			VIIa	1, 2, 3, 4, 5, 6, 7 _ _ _
j			Vb	_ 1,2 _
m	IVa	B,D,F,H _ _		
n	IVa	A,C,E,G _ _		
p			III	B - No CRN number available
s	Ia	A,E _ _ _ _ _		
t			1a	J _ _ _ _ _

[5]The PM option is available on all Smartline Pressure Transmitter process wetted parts such as process heads, flanges, bushings and vent plugs except plated carbon steel process heads and flanges. PM option information is also available on diaphragms except STG and STA in-line construction pressure transmitters.

FIELD INSTALLABLE ACCESSORY KITS

Description	Kit Number	Price
Terminal Strip w/o Lightning Protection Kit for HART Module	50129832-501	Note P
Terminal Strip w/Lightning Protection for HART Module	50129832-502	Note P
HART Electronics Module	50129828-501	Note P
HART Electronics Module w/connection for external Zero/Span buttons	50129828-502	Note P
Standard Display Module	50126003-501	Note P

Note P - For part number pricing please refer to WEB Channel

PRODUCT MANUALS

Description	Part Number
ST 700 Smart Transmitter User Manual - English	34-ST-25-44
ST 700 Smart Transmitter HART Communications Manual - English	34-ST-25-47
ST 700 Smart Transmitter Safety Manual - English	34-ST-25-37

Sales and Service

For application assistance, current specifications, ordering, pricing, and name of the nearest Authorized Distributor, contact one of the offices below.

ASIA PACIFIC
Honeywell Process Solutions,
Phone: + 800 12026455 or
+44 (0) 1202645583
(TAC) **hfs-tac-support@honeywell.com**

Australia
Honeywell Limited
Phone: +(61) 7-3846 1255
FAX: +(61) 7-3840 6481
Toll Free 1300-36-39-36
Toll Free Fax:
1300-36-04-70

China – PRC - Shanghai
Honeywell China Inc.
Phone: (86-21) 5257-4568
Fax: (86-21) 6237-2826

Singapore
Honeywell Pte Ltd.
Phone: +(65) 6580 3278
Fax: +(65) 6445-3033

South Korea
Honeywell Korea Co Ltd
Phone: +(822) 799 6114
Fax: +(822) 792 9015

EMEA
Honeywell Process Solutions,
Phone: + 800 12026455 or
+44 (0) 1202645583

Email: (Sales)
FP-Sales-Apps@Honeywell.com
or
(TAC)
hfs-tac-support@honeywell.com

Web
Knowledge Base search
engine **http://bit.ly/2N5VIdi**

AMERICAS
Honeywell Process Solutions,
Phone: (TAC) (800) 423-9883
or (215) 641-3610
(Sales) 1-800-343-0228

Email: (Sales)
FP-Sales-Apps@Honeywell.com
or
(TAC)
hfs-tac-support@honeywell.com

Web
Knowledge Base search
engine **http://bit.ly/2N5VIdi**

Specifications are subject to change without notice.

For more information
To learn more about SmartLine Pressure Transmitters visit **www.honeywellprocess.com**
Or contact your Honeywell Account Manager

Process Solutions
Honeywell
1250 W Sam Houston Pkwy S
Houston, TX 77042

Honeywell Control Systems Ltd
Honeywell House, Skimped Hill Lane
Bracknell, England, RG12 1EB

Shanghai City Centre, 100 Jungi Road
Shanghai, China 20061

www.honeywellprocess.com

Authorized Distributor:

De Gidts & Feldman
INSTRUMENTATION & FILTRATION

De Gidts & Feldman B.V.
Almere – The Netherlands
E-mail sales@dgfg.nl
Website www.dgfg.nl

Honeywell

34-ST-03-120
March 2024
©2024 Honeywell International Inc.