SmartLine

Honeywell

Technical Information

STA800 SmartLine Absolute Pressure Specification 34-ST-03-85, April 2023

Introduction

Part of the SmartLine® family of products, the STA800 and STA80L are high performance absolute pressure transmitters featuring piezoresistive sensor technology combining pressure sensing with on chip temperature compensation capabilities providing high accuracy, stability and performance over a wide range of application pressures and temperatures. The SmartLine family is also fully tested and compliant with Experion® PKS providing the highest level of compatibility assurance and integration capabilities. SmartLine easily meets the most demanding application needs for pressure measurement applications..

Best in Class Features:

- Accuracies up to 0.0375% of span standard & 0.025% of span optional
- Stability up to 0.01% of URL per year for 15 years
- Automatic temperature compensation
- Rangeability up to 100:1
- Response times as fast as 80ms
- Multiple local display capabilities
- External zero, span, & configuration capability
- Polarity insensitive electrical connections
- Comprehensive on-board diagnostic capabilities
- Integral Dual Seal design for highest safety based on ANSI/NFPA 70-202 and ANSI/ISA 12.27.2
- Full compliance to SIL 2/3 requirements
- Modular design characteristics
- Available with additional 15-year warranty
- Plugged Impulse Line Detection Option
- Dual/Triple Calibration Option (HART & Fieldbus Only)

Figure 1 – STA800 Absolute Pressure Transmitters feature field-proven piezoresistive sensor technology

Communications/Output Options:

- 4-20mA
- Honeywell Digitally Enhanced (DE)
- HART ® (version 7.0)
- FOUNDATION™ Fieldbus

All transmitters are available with the above listed communications protocols.

Span & Range Limits:

Model	URL mmHgA (mbarA)	LRL mmHgA (mbarA)	Min Span mm HgA (mbarA)
STA822/82L	780 (1040)	0 (0)	50 (66.7)
Model	**Psia (barA)**	**psi (barA)**	**psi (barA)**
STA840/84L	500 (35)	0 (0)	5 (.35)
STA87L	3000 (210)	0 (0)	30 (2.1)

Description

The SmartLine family of gauge pressure, differential pressure, and absolute pressure transmitters is designed around a high performance piezo-resistive sensor. This one sensor actually integrates multiple sensors linking process pressure measurement with on-board static pressure (DP Models) and temperature compensation measurements resulting in the best total performance available. This level of performance allows the ST 800 to replace virtually any competitive transmitter available today. (√)

Unique Indication/Display Options

The ST 800 modular design accommodates a basic alphanumeric LCD display or a unique advanced graphics LCD display with many unparalleled features.

Basic Alphanumeric LCD Display Features

- Modular (may be added or removed in the field)
- 0, 90,180, & 270 degree position adjustments
- Configurable (HART only) and standard (Pa, KPa, MPa, KGcm2, Torr, ATM, inH_2O, mH_2O, bar, mbar, inH_2O, inHG, FTH_2O, mmH_2O, mm HG, & psi) measurement units
- 2 Lines 16 Characters (4.13H x 1.83W mm)
- Square root output indication

Advanced Graphics LCD Display Features

- Modular (may be added or removed in the field)
- 0, 90, 180, & 270 degree position adjustments
- Standard and custom measurement units available.
- Up to eight display screens with 3 formats are possible
- (Large PV with Bar Graph or PV with Trend Graph)
- Configurable screen rotation timing (1 to 30 sec)
- Display Square Root capabilities may be set separately from the 4-20mA dc output signal
- Unique “Health Watch” indication provides instant visibility of diagnostics
- Multiple language capability (EN, GE, FR, IT, SP, RU, TR, CN and JP)

Diagnostics

SmartLine transmitters all offer digitally accessible diagnostics which aid in providing advanced warning of possible failure events minimizing unplanned shutdowns, providing **lower overall operational costs**

Configuration Tools

Integral Three Button Configuration Option

Suitable for all electrical and environmental requirements, SmartLine offer the ability to configure the transmitter and display via three externally accessible buttons when either display option is selected. Zero/span capabilities are also optionally available via these buttons with or without selection of a display option.

Handheld Configuration

SmartLine transmitters feature two-way communication and configuration capability between the operator and the transmitter. All Honeywell transmitters are designed and tested for compliance with the offered communication protocols and are designed to operate with any Standards compliant handheld configuration device.

Personal Computer Configuration

Honeywell’s SCT 3000 Configuration Toolkit provides an easy way to configure Digitally Enhanced (DE) instruments using a personal computer as the configuration interface. Field Device Manager (FDM) Software and FDM Express are also available for managing HART & Fieldbus device configurations.

System Integration

- SmartLine communications protocols all meet the most current published standards for HART/DE/Fieldbus.
- Integration with Honeywell’s Experion PKS offers the following unique advantages.
  - Transmitter messaging
  - Maintenance mode indication
  - Tamper reporting
  - FDM Plant Area Views with Health summaries
  - All ST 800 units are Experion tested to provide the highest level of compatibility assurance

Modular Design

To help contain maintenance & inventory costs, all ST 800 transmitters are modular in design supporting the user's ability to replace meter bodies, add indicators or change electronic modules without affecting overall performance or approval body certifications. Each meter body is uniquely characterized to provide in-tolerance performance over a wide range of application variations in temperature and pressure and due to the Honeywell advanced interface, electronic modules may be swapped with any electronics module without losing in-tolerance performance characteristics.

Modular Features

- Meter body replacement
- Exchange/replace electronics/comms modules*
- Add or remove integral indicators*
- Add or remove lightning protection (terminal connection)*

* Field replaceable in all electrical environments (including IS) except flameproof without violating agency approvals.

With no performance effects, Honeywell's unique modularity results in ***lower inventory needs and lower overall operating costs.***

Plugged Impulse Line Detection

STA800 models are offered with a PILD option which provides indication of a plugged impulse line or process connection. When used in conjunction with a basic or advanced display, a non-critical diagnostic indication appears on the integral display. For units without an integral display, an indication can be seen via the host or handheld device when HART Protocol is utilized.

Dual/Triple Calibration

STA800 models are optionally offered with multiple calibrations. In lieu of a standard factory calibration, units can be supplied with 1, 2, or 3 customer specified calibrations. These calibrations are stored in the meter body and provide users with factory calibrated performance at up to three different calibrated ranges. This increases application flexibility without requiring any costly recalibration or additional inventory.

Performance Specifications

Reference Accuracy:(conformance to +/-3 Sigma)

Table 1

Model	URL	LRL	Min Span	Maximum Turndown Ratio	Stability (% URL/ Year for 15 years)	Reference Accuracy[1,2] % Span Std/Opt.
STA822	780 mmHgA (1040 mbarA)	0.0 mmHgA (0.0 mbarA)	50 mmHgA (66.7 mbarA)	15:1	0.010	0.0375/0.025
STA840	500 psia (35 barA)	0.0 mmHgA (0.0 mbarA)	5 psia (0.35 barA)	100:1		
STA82L	780 mmHgA (1040 mbarA)	0.0 mmHgA (0.0 mbarA)	50 mmHgA (66.7 mbarA)	15:1	0.015	0.0375
STA84L	500 psia (35 barA)	0.0 mmHgA (0.0 mbarA)	5 psia (0.35 barA)	100:1	0.010	0.0375/0.025
STA87L	3000 psi (210 barA)	0.0 mmHgA (0.0 mbarA)	30 psia (2.1 barA)	100:1		

Zero and span may be set anywhere within the listed (URL/LRL) range limits.

Performance Specifications

Accuracy at Specified Span and Temperature: (Combined Zero & Span, conformance to +/-3 Sigma)

Table 2

			Accuracy[1,2] (% of Span)				Combined Zero & Span Temperature Effect (% Span/28ºC (50ºF))	
	Model	URL	Reference Turndown	A	B	C (see URL units)	D	E
Standard Accuracy	STA822	780 mmHgA (1040 mbarA)	8.7:1	0.005	0.0325	90 (120)	0.050	0.040
	STA840	500 psia (35 barA)	25:1			20 (1.4)	0.025	0.005
	STA82L	780 mmHgA (1040 mbarA)	5.6:1			140 (187)	0.050	0.080
	STA84L	500 psia (35 barA)	25:1			20 (1.4)	0.025	0.007
	STA87L	3000 psi (210 barA)	10:1			300 (21)		
High Accuracy Option	STA822	780 mmHgA (1040 mbarA)	8.7:1	0.005	0.0200	90 (120)	0.050	0.040
	STA840	500 psia (35 barA)	25:1			20 (1.4)	0.025	0.005
	STA84L	500 psia (35 barA)	25:1			20 (1.4)		0.007
	STA87L	3000 psi (210 barA)	10:1			300 (21)		
			Turn Down Effect $\pm[A+B] \quad if\ Span \geq C$ $\pm\left[A+B\left(\frac{C}{Span}\right)\right] \quad if\ Span < C$				**Temp Effect** $\pm[D+E\left(\frac{URL}{Span}\right)]$	

Total Performance (% of Span):

Total Performance Calculation: $= +/- \sqrt{(\text{Accuracy})^2 + (\text{Temperature Effect})^2}$

Total Performance Examples (for comparison): standard accuracy 5:1 Turndown, +/-50ºF (28ºC) shift

STA822 @ 156 mmHgA	0.253% of span	**STA82L @ 156 mmHgA**	0.451% of span
STA840 @ 100 psia	0.063% of span	**STA84L @ 100 psia**	0.071% of span
STA87L @ 600 psia	0.071% of span		

Typical Calibration Frequency:

Calibration verification is recommended every four (4) years.

Notes:

1. Terminal Based Accuracy - Includes combined effects of linearity, hysteresis, and repeatability. Analog output adds 0 .005% of span.
2. For zero based spans and reference conditions of: 25ºC (77ºF), 10 to 55% RH, and 316 Stainless Steel barrier diaphragm.

Operating Conditions – All Models

Parameter	Reference Condition		Rated Condition		Operative Limits		Transportation and Storage	
	°C	°F	°C	°F	°C	°F	°C	°F
Ambient Temperature[1]	25±1	77±2	-40 to 85	-40 to 185	-40 to 85	-40 to 185	-55 to 120	-67 to 248
Meter Body Temperature[2]								
STA822/STA82L	25±1	77±2	See Figure 2		See Figure 2		-55 to 125	-67 to 257
STA840, 84L, 87L	25±1	77±2	-40 to 110	-40 to 230	-40 to 125	-40 to 257	-55 to 125	-67 to 257
Humidity %RH	10 to 55		0 to 100		0 to 100		0 to 100	
Vacuum Region - Minimum Pressure STA822, 82L, 840,84L, 87L	See Figure 2. Operate within specifications above 25 mmHgA (33 mbarA). Short term[3] exposure to full vacuum will not result in damage.							
Supply VoltageLoad Resistance	HART: 10.8 to 42.4 VDC at terminals (IS versions limited to 30 VDC), 0 to 1,440 ohms DE: 15 to 49.3VDC at terminals (IS versions limited to 30VDC), 0 to 1,200 ohms (as shown in Figure 3) FOUNDATION Fieldbus: 9.0 to 32.0 VDC at terminals, steady state current: 17.6mA, software download current: 27.4mA							
Maximum Allowable Working Pressure (MAWP) [4], [5]	STA822, 82L = 780 mmHgA, 1,040 mbarA STA840, 84L = 500 psia, 35 barA STA87L = 3,000 psia, 210 barA							

[1] LCD Display operating temperature -20°C to +70°C Storage temperature -30°C to 80°C.

[2] Silicone 704 minimum temperature rating is 0ºC (32ºF). CTFE minimum temperature rating is -40°C (-40°F).

[3] Short term equals 2 hours at 70°C (158°F)

[4] Units can withstand overpressure of 1.5 x MAWP without damage

[5] Consult factory for MAWP of ST 700 transmitters with CRN approval

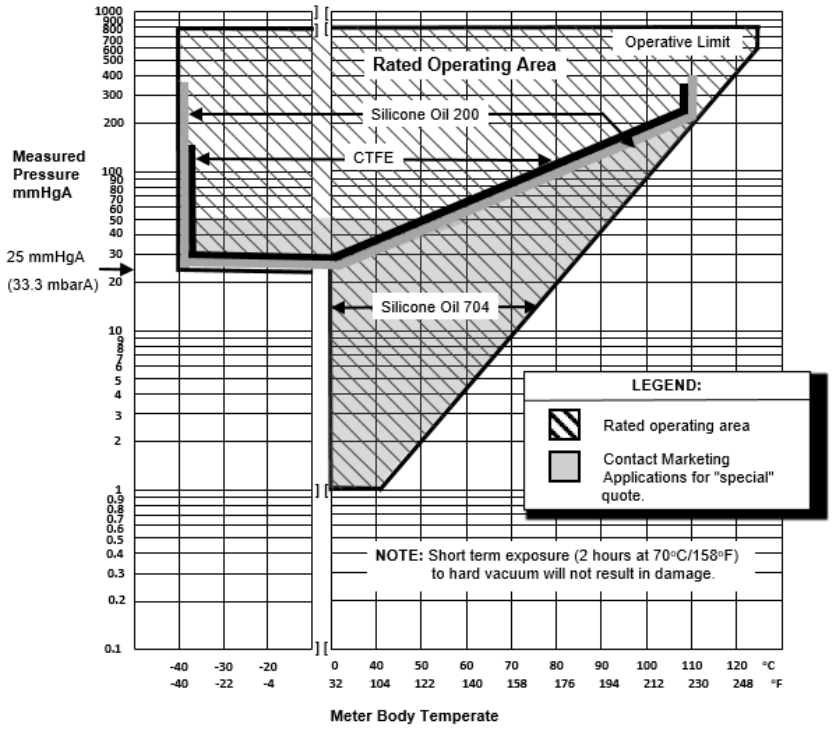

Figure 2 - Measured pressure versus meter body temperature chart for STA722, 72L

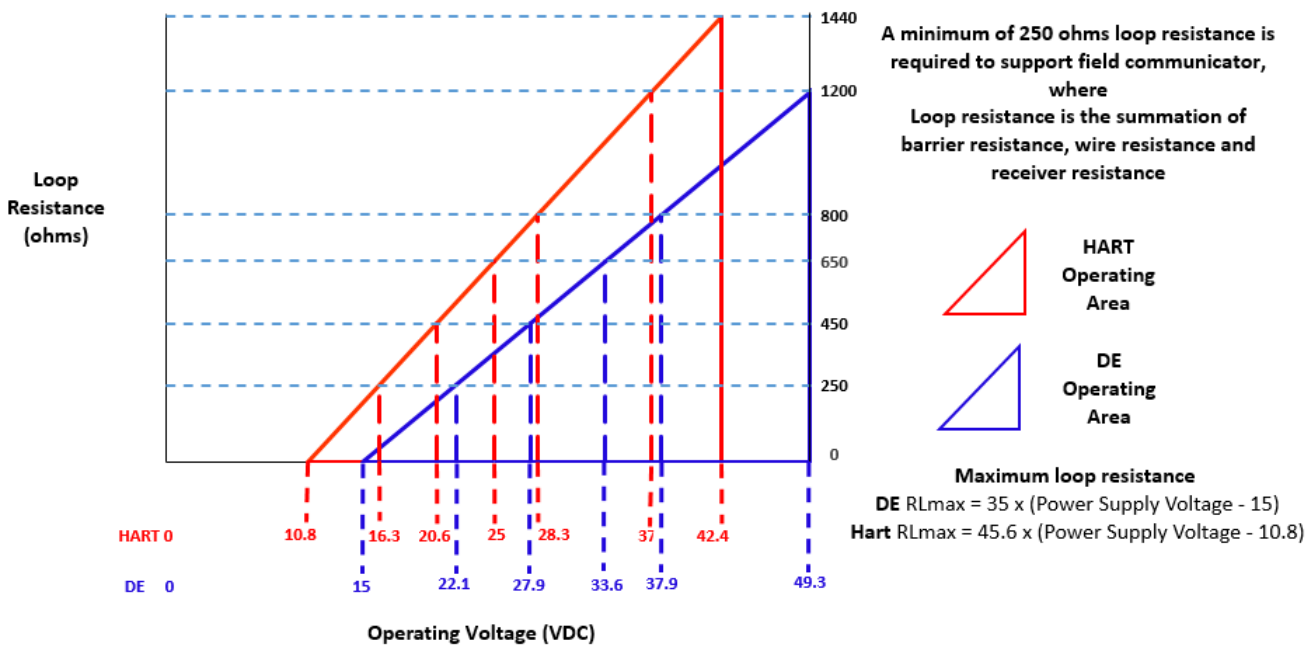

Figure 3 - Supply voltage and loop resistance chart & calculations

Performance Under Rated Conditions – All Models

Parameter	Description
Analog Output **Digital Communications**:	Two-wire, 4 to 20 mA (HART & DE Transmitters only) Honeywell DE, HART protocol or FOUNDATION Fieldbus ITK 6.0.1 compliant All transmitters, irrespective of protocol have polarity insensitive connection.
HART & DE Output Failure Modes (NAMUR for DE Units requires selecting display and configuration buttons or factory configuration)	**Honeywell Standard** / **NAMUR NE 43 Compliance** **Normal Limits:** 3.8 – 20.8 mA / 3.8 – 20.5 mA **Failure Mode:** ≤ 3.6 mA and ≥ 21.0 mA / ≤ 3.6 mA and ≥ 21.0 mA
Supply Voltage Effect	0.005% of span per volt.
Transmitter Turn on Time (includes power up & test algorithms)	HART or DE: 2.5 seconds Foundation Fieldbus: host dependent
Response Time (delay + time constant)	**DE/HART Protocol**: 80ms **FOUNDATION Fieldbus**: 150ms (Host Dependent)
Damping Time Constant	**HART:** Adjustable from 0 to 32 seconds in 0.1 increments. **Default Value:** 0.5 seconds **DE:** Discrete values 0, .16, .32, .48, 1, 2, 4, 8, 16, 32 seconds. **Default Value:** 0.48 seconds
Vibration Effect	Less than +/- 0.1% of URL w/o damping Per IEC60770-1 field or pipeline, high vibration level (10-2000Hz: 0.21 displacement/3g max acceleration)
Electromagnetic Compatibility	Meets IEC61326
Lightning Protection Option	**Leakage Current:** 10uA max @ 42.4VDC 93C **Impulse rating:** 8/20us 5000A (>10 strikes) 10000A (1 strike min.) 10/1000us 200A (> 300 strikes)

Materials Specifications (see model selection guide for availability/restrictions with various models)

Parameter	Description
Barrier Diaphragms Material	**STA800**: 316L SS, Hastelloy® C-276[2], Monel® 400 [3], Tantalum, Gold-plated 316L SS, Gold-plated Hastelloy® C-276, Gold-plated Monel® 400 **STA80L**: 316L SS, Hastelloy C-276
Process Head Material	**STA800**: Carbon Steel (Zinc Plated) [5], 316 SS[4], Hastelloy® C-276[6], Monel® 400 [7] **STG80L:** 316L SS, Hastelloy C-276[6]
Vent/Drain Valves & Plugs [1]	**STA800:** 316 SS[4], Hastelloy C-276[2], Monel 400 [7] **STA80L:** N/A
Head Gaskets	**STA800:** Glass-filled PTFE standard. Viton® and graphite are optional. **STA80L:** N/A
Meter Body Bolting	**STA800:** Carbon Steel (Zinc plated) standard. Options include 316 SS, NACE A286 SS bolts and nuts or NACE A286 SS bolts and 304 SS nuts **STA80L:** N/A
Mounting Bracket	Carbon Steel (Zinc-plated) or 304 Stainless Steel or 316Stainless Steel. See Figure 4 & Figure 5
Fill Fluid	Silicone 200, CTFE or Silicone 704
Electronic Housing	Pure Polyester Powder Coated Low Copper (<0.4%)-Aluminum. Meets NEMA 4X, IP66, IP67 and NEMA 7 (explosion proof). All stainless steel housing is optional.
Process Connections	**STA800:** ½ -inch NPT(female), DIN 19213 (standard) **STA80L:** ½ -inch NPT(female), ½ -inch NPT male, 9/16 Aminco, DIN19213, G ½ -B Male threaded
Wiring	Accepts up to 16 AWG (1.5 mm diameter).
Dimensions	See Figure 4 & Figure 5
Net Weight	**STA800:** 8.3 pounds (3.8 Kg). **STA80L:** 3.6 pounds (1.6 Kg) with Aluminum Housing

[1] Vent/Drains are sealed with Teflon®
[2] Hastelloy® C-276 or UNS N10276
[3] Monel® 400 or UNS N04400
[4] Supplied as 316 SS or as Grade CF8M, the casting equivalent of 316 SS.
[5] Carbon Steel heads are zinc-plated and not recommended for water service due to hydrogen migration. For that service, use 316 stainless steel wetted Process Heads.
[6] Hastelloy® C-276 or UNS N10276. Supplied as indicated or as Grade CW12MW, the casting equivalent of Hastelloy® C-276
[7] Monel® 400 or UNS N04400. Supplied as indicated or as Grade M30C, the casting equivalent of Monel® 400

Communications Protocols & Diagnostics

HART Protocol

Version: HART 7

Foundation Fieldbus (FF)

Available Function Blocks

Block Type	Qty	Execution Time
Resource	1	n/a
Transducer	1	n/a
Diagnostic	1	n/a
Analog Input	1*	30 ms
PID w/Autotune	1	45 ms
Integrator	1	30 ms
Signal Char (SC)	1	30 ms
LCD Display	1	n/a
Flow Block	1	30 ms
Input Selector	1	30 ms
Arithmetic	1	30 ms

* AI block may have two (2) additional instantiations.

All available function blocks adhere to FOUNDATION Fieldbus standards. PID blocks support ideal & robust PID algorithms with full implementation of Auto-tuning.

Link Active Scheduler

Transmitters can perform as a backup Link Active Scheduler and take over when the host is disconnected. Acting as a LAS, the device ensures scheduled data transfers typically used for the regular, cyclic transfer of control loop data between devices on the Fieldbus.

Number of Devices/Segment

Entity IS model: 6 devices/segment

Schedule Entries

18 maximum schedule entries

Number of VCR's: 24 max

Compliance Testing: Tested according to ITK 6.0.1

Software Download

Utilizes Class-3 of the Common Software Download procedure as per FF-883 which allows the field devices of any manufacturer to receive software upgrades from any host.

Honeywell Digitally Enhanced (DE)

DE is a Honeywell proprietary protocol which provides digital communications between Honeywell DE enabled field devices and hosts.

Standard Diagnostics

ST 800 top level diagnostics are reported as either critical or non-critical and readable via the DD/DTM tools or integral display as shown below.

Critical Diagnostics		
HART DD/DTM tools	**Advanced Display**	**Basic Display**
Electronic Module DAC Failure	Electronics Module fault	Electronics Module fault
Meter Body NVM Corrupt	Meterbody fault	Meterbody fault
Config Data Corrupt	Electronics Module fault	Electronics Module fault
Electronic Module Diag Failure	Electronics Module fault	Electronics Module fault
Meter Body Critical Failure	Meterbody fault	Meterbody fault
Sensor Comm Timeout	Meterbody Comm fault	Meterbody Comm fault

Non-Critical Diagnostics		
HART DD/DTM tools	**Advanced Display**	**Basic Display**
Display Failure	n/a	n/a
Electronic Module Comm Failure	n/a	n/a
Meter Body Excess Correct	Zero Correct (OK or EXCESSIVE) Span Correct (OK or EXCESSIVE)	n/a
Sensor Over Temperature	Meterbody Temp (OK, OVER TEMP)	n/a
Fixed Current Mode	Analog Out mode (Fixed or Normal)	n/a
PV Out of Range	Primary PV (OK or OVERLOAD)	n/a
No Factory Calibration	Factory Cal (OK, NO FACTORY CAL)	n/a
No DAC Compensation	DAC Temp Comp (OK, NO COMPENSATION)	n/a
LRV Set Error – Zero Config Button	n/a	n/a
URV Set Error – Span Config Button	n/a	n/a
AO Out of Range	n/a	n/a
Loop Current Noise	n/a	n/a
Meter Body Unreliable Comm	Meterbody Comm (OK, SUSPECT)	n/a
Tamper Alarm	n/a	n/a
No DAC Calibration	n/a	n/a
Sensor Supply Voltage Low	Supply Voltage (OK, LOW, or HIGH)	n/a

Refer to ST 800 diagnostics tech note for additional level diagnostics.

Other Certification Options

Materials

- NACE MRO175, MRO103, ISO15156

Hazardous Areal Certifications

MSG CODE	AGENCY	TYPE OF PROTECTION	COMM. OPTION	ELECTRICAL PARAMETERS	AMBIENT TEMP (Ta)
A	FM Approvals™ USA	**Explosionproof:** Class I, Division 1, Groups A, B, C, D; Dust Ignition Proof: Class II, III, Division 1, Groups E, F, G; T6..T5 Class l, Zone 0/1, AEx db IIC T6..T5 Ga/Gb Class ll, Zone 21, AEx tb IIIC T95° Db	All	Note 1	T5: -50 ºC to 85ºC T6: -50 ºC to 65ºC
		Intrinsically Safe: Class I, II, III, Division 1, Groups A, B, C, D, E, F, G: T4 Class l, Zone 0, AEx ia IIC T4 Ga FISCO Field Device (Only for FF Option) Ex ia IIC T4 Ga; Ex ic IIC T4 Gc	4-20 mA / DE/ HART	Note 2a	-50 ºC to 70ºC
			Foundation Fieldbus	Note 2b	-50 ºC to 70ºC
		Nonincendive: Class I, Division 2, Groups A, B, C, D locations, T4 Class l, Zone 2, AEx nA IIC T4 Gc	4-20 mA / DE/ HART/ Foundation Fieldbus	Note 1	-50 ºC to 85ºC
		Enclosure: Type 4X/ IP66/ IP67	All	All	-
		STANDARDS: FM Class 3600:2011; FM Class 3610: 2010; FM Class 3611: 2004; FM Class 3615: 2006; FM Class 3616: 2011; FM Class 3810: 2005; ANSI/ISA 60079-0: 2013; ANSI/UL 60079-1: 2015; ANSI/UL 60079-11: 2014; ANSI/ISA 60079-15: 2012; ANSI/UL 60079-26: 2017; ANSI/UL 60079-31: 2015; ANSI/NEMA 250: 2003; ANSI/ IEC 60529: 2004			
B	Canadian Standards Association (CSA) USA and Canada	**Explosion Proof:** Class I, Division 1, Groups A, B, C, D; Class II, Division 1, Groups E, F, G; Class III, Division 1, T6..T5 Class I Zone 1 AEx db IIC T6..T5 Ga/Gb Ex db IIC T6..T5 Ga/Gb Zone 22 AEx tb IIIC T95° Db Ex tb IIIC T95° Db	All	Note 1	T5: -50°C TO 85°C T6: -50°C TO 65°C
		Intrinsically Safe: Class I, II, III, Division 1, Groups A, B, C, D; Class II, Division 1, Groups E, F, G; Class III, Division 1, T4 Class I Zone 0, AEx ia IIC T4 Ga Class I Zone 2, AEx ic IIC T4 Gc Ex ia IIC T4 Ga Ex ic IIC T4 Gc FISCO Field Device (Only for FF Option) Ex ia IIC T4 Ga; Ex ic IIC T4 Gc	4-20 mA / DE/ HART	Note 2	-50°C TO 70°C
			Foundation Fieldbus	Note 2	-50°C TO 70°C
		Nonincendive: Class I, Division 2, Groups A, B, C, D; Class II, Division 2, Groups F, G; Class III, Division 2, T4 Class I Zone 2 AEx nA IIC T4 Gc Ex nA IIC T4 Gc	4-20 mA / DE/ HART/ Foundation Fieldbus	Note 1	-50°C to 85°C
		Enclosure: Type 4X/ IP66/ IP67	All	All	-
		STANDARDS: CSA C22.2 No. 0-10; CSA C22.2 No. 94-M91; CSA C22.2 No. 25-1966; CSA C22.2 No. 30-M1986; CSA C22.2 No. 142-M1987; CSA C22.2 No. 157-92; CSA C22.2 No. 213-M1987;			

MSG CODE	AGENCY	TYPE OF PROTECTION	COMM. OPTION	ELECTRICAL PARAMETERS	AMBIENT TEMP (Ta)
		CSA-C22.2 No. 60529:05; CSA-C22.2 No. 60079-0:11; CSA-C22.2 No. 60079-1:11; CSA-C22.2 No. 60079-11:11; CSA-C22.2 No. 60079-15:12; CSA-C22.2 No. 60079-31:12; ISA 12.12.01-2010; ISA 60079-0: 2009; ISA 60079-11: 2011; ISA 60079-15: 2009; ISA 60079-26: 2008; ISA-60079-27:2007 (12.02.04)-2006 (R2011); UL 913 Ed. 6; UL 916:1998; ANSI/ISA-12.27.01-2011			
C	ATEX	**Flameproof: SIRA 12ATEX2233X** II 1/2 G Ex db IIC T6..T5 Ga/Gb II 2 D Ex tb IIIC T95°C…T120°C Db	All	Note 1	T5: -50°C TO 85°C T6: -50°C TO 65°C
		Intrinsically Safe: SIRA 12ATEX2233X II 1 G Ex ia IIC T4 Ga II 2 D Ex ia IIIC T125°C Db FISCO Field Device (Only for FF Option) II 1 G Ex ia IIC T4 Ga	4-20 mA / DE/ HART	Note 2	-50°C TO 70°C
			Foundation Fieldbus	Note 2	-50°C TO 70°C
		Zone 2, Increase Safety: SIRA 12ATEX4234X II 3 G Ex ec IIC T4 Gc	4-20 mA / DE/ HART/	Note 1	-50°C TO 85°C
		Zone 2, Intrinsically Safe: SIRA 12ATEX4234X II 3 G Ex ic IIC T4 Gc FISCO Field Device (Only for FF Option) II 3 G Ex ic IIC T4 Gc	4-20 mA / DE/ HART/ Foundation Fieldbus	Note 2	-50°C TO 85°C
		Enclosure: IP66/ IP67	All	All	-
		STANDARDS: EN 60079-0: 2018; EN 60079-1: 2014; EN 60079-7: 2015; EN 60079-11: 2012; EN 60079-26: 2015; EN 60079-31: 2014			
	UKEX	**Flameproof: CSAE 22UKEX1021X** II 1/2 G Ex db IIC T6..T5 Ga/Gb II 2 D Ex tb IIIC T95°C…T120°C Db	All	Note 1	T5: -50°C TO 85°C T6: -50°C TO 65°C
		Intrinsically Safe: CSAE 22UKEX1021X II 1 G Ex ia IIC T4 Ga II 2 D Ex ia IIIC T125°C Db FISCO Field Device (Only for FF Option) II 1 G Ex ia IIC T4 Ga	4-20 mA / DE/ HART	Note 2	-50°C TO 70°C
			Foundation Fieldbus	Note 2	-50°C TO 70°C
		Zone 2, Increase Safety: CSAE 22UKEX1008X II 3 G Ex ec IIC T4 Gc	4-20 mA / DE/ HART/	Note 1	-50°C TO 85°C
		Zone 2, Intrinsically Safe: CSAE 22UKEX1008X II 3 G Ex ic IIC T4 Gc FISCO Field Device (Only for FF Option) II 3 G Ex ic IIC T4 Gc	4-20 mA / DE/ HART/ Foundation Fieldbus	Note 2	-50°C TO 85°C
		Enclosure: IP66/ IP67	All	All	-

MSG CODE	AGENCY	TYPE OF PROTECTION	COMM. OPTION	ELECTRICAL PARAMETERS	AMBIENT TEMP (Ta)
		STANDARDS: EN 60079-0: 2018; EN 60079-1: 2014; EN 60079-7: 2015; EN 60079-11: 2012; EN 60079-26: 2015; EN 60079-31: 2014			
D	**IECEx World**	**Flameproof: IECEx SIR 12.0100X** Ex db IIC T6..T5 Ga/Gb Ex tb IIIC T95°C…T120°C Db	All	Note 1	T5: -50°C TO 85°C T6: -50°C TO 65°C
		Intrinsically Safe: IECEx SIR 12.0100X Ex ia IIC T4 Ga Ex ia IIIC T125°C Db FISCO Field Device (Only for FF Option) Ex ia IIC T4 Ga; Ex ic IIC T4 Gc	4-20 mA / DE/ HART	Note 2	-50°C TO 70°C
			Foundation Fieldbus	Note 2	-50°C TO 70°C
		Zone 2, Increase Safety: IECEx SIR 12.0100X Ex ec IIC T4 Gc	4-20 mA / DE/ HART/ Foundation Fieldbus	Note 1	-50°C TO 85°C
		Zone 2, Intrinsically Safe: IECEx SIR 12.0100X Ex ic IIC T4 Gc FISCO Field Device (Only for FF Option) Ex ic IIC T4 Gc	4-20 mA / DE/ HART/ Foundation Fieldbus	Note 2	-50°C TO 85°C
		Enclosure: IP66/ IP67	All	All	-
		STANDARDS: IEC 60079-0: 2017; IEC 60079-1: 2014; IEC 60079-7: 2017; IEC 60079-11: 2011; IEC 60079-26: 2014; IEC 60079-31: 2013			

E	SAEx South Africa	**Flameproof :** Ex d IIC T6…T5 Ga/Gb Ex tb IIIC T95ºC…T120ºC Db	All	Note 1	T5: -50ºC TO 85ºC T6: -50ºC TO 65ºC
		Intrinsically Safe: Ex ia IIC Ga T4 FISCO Field Device (Only for FF Option) Ex ia IIC T4 Ga; Ex ic IIC T4 Gc	4-20 mA / DE/ HART	Note 2	-50ºC TO 70ºC
			Foundation Fieldbus	Note 2	-50ºC TO 70ºC
		Zone 2, Increase Safety: II 3 G Ex ec IIC T4 Gc	4-20 mA / DE/ HART/ Foundation Fieldbus	Note 1	-50ºC TO 85ºC
		Zone 2, Intrinsically Safe: Ex ic IIC T4 Gc FISCO Field Device (Only for FF Option) Ex ic IIC T4 Gc	4-20 mA / DE/ HART/ Foundation Fieldbus	Note 2	-50ºC TO 85ºC
		Enclosure: IP66/ IP67	All	All	-
F	INMETRO Brazil	**Flameproof:** Ex db IIC T6..T5 Ga/Gb Ex tb IIIC T95ºC…T120ºC Db	All	Note 1	T5: -50ºC TO 85ºC T6: -50ºC TO 65ºC
		Intrinsically Safe: Ex ia IIC T4 Ga FISCO Field Device (Only for FF Option) Ex ia IIC T4 Ga; Ex ic IIC T4 Gc	4-20 mA / DE/ HART	Note 2a	-50ºC TO 70ºC
			Foundation Fieldbus	Note 2b	-50ºC TO 70ºC
		Zone 2, Increase Safety: II 3 G Ex ec IIC T4 Gc	4-20 mA / DE/ HART/ Foundation Fieldbus	Note 1	-50ºC TO 85ºC
		Zone 2, Intrinsically Safe: Ex ic IIC T4 Gc FISCO Field Device (Only for FF Option) Ex ic IIC T4 Gc	4-20 mA / DE/ HART/ Foundation Fieldbus	Note 2	-50ºC TO 85ºC
		Enclosure : IP 66/67	All	All	-
G	NEPSI CHINA	**Flameproof:** Ex db IIC T6..T5 Ga/Gb Ex tb IIIC T 95ºC Db	All	Note 1	T5: -50ºC TO 85ºC T6: -50ºC TO 65ºC
		Intrinsically Safe: Ex ia IIC T4 Ga FISCO Field Device (Only for FF Option) Ex ia IIC T4 Ga; Ex ic IIC T4 Gc	4-20 mA / DE/ HART	Note 2	-50ºC TO 70ºC
			Foundation Fieldbus	Note 2	-50ºC TO 70ºC
		Zone 2, Increase Safety: II 3 G Ex ec IIC T4 Gc	4-20 mA / DE/ HART/ Foundation Fieldbus	Note 1	-50ºC TO 85ºC
		Zone 2, Intrinsically Safe: Ex ic IIC T4 Gc FISCO Field Device (Only for FF Option) Ex ic IIC T4 Gc	4-20 mA / DE/ HART/ Foundation Fieldbus	Note 2	-50ºC TO 85ºC
		Enclosure : IP 66/67	All	All	-

H	**KOSHA Korea**	**Flameproof :** Ex d IIC T4, T5, T6 Ex tD A21 IP66/IP67 T95°C…T120 °C	All	Note 1	T4: -50°C TO 85°C T5: -50°C TO 85°C T6: -50°C TO 65°C
		Intrinsically Safe: Ex ia IIC T4	4-20 mA / DE/ HART	Note 2	Ta= -50 ºC to 70ºC
			Foundation Fieldbus	Note 2	Ta= -50 ºC to 70ºC
		Enclosure: IP66/ IP67	All	All	-
I	**EAC Russia, Belarus and Kazakhstan**	**Flameproof:** Ga/Gb Ex d IIC T6..T5 Ex tb IIIC Db T 85°C	All	Note 1	T5: -50°C TO 85°C T6: -50°C TO 65°C
		Intrinsically Safe: Ga Ex ia IIC T4 X FISCO Field Device (Only for FF Option) Ga Ex ia IIC T4 X	4-20 mA / DE/ HART	Note 2	-50°C TO 70°C
			Foundation Fieldbus	Note 2	-50°C TO 70°C
		Zone 2, Non Sparking: 2 Ex nA IIC T4 Gc X	4-20 mA / DE/ HART/ Foundation Fieldbus	Note 1	-50°C TO 85°C
		Zone 2, Intrinsically Safe: Ga Ex ic IIC T4 X FISCO Field Device (Only for FF Option) 2 Ex ic IIC T4 Gc X	4-20 mA / DE/ HART/ Foundation Fieldbus	Note 2	-50°C TO 85°C
		Enclosure : IP 66/67	All	All	
J	**CCoE INDIA**	**Flameproof:** Ex d IIC T6..T5 Ga/Gb	All	Note 1	T5: -50°C TO 85°C T6: -50°C TO 65°C
		Intrinsically Safe: Ex ia IIC T4 Ga FISCO Field Device (Only for FF Option) Ex ia IIC T4 Ga; Ex ic IIC T4 Gc	4-20 mA / DE/ HART	Note 2	-50°C TO 70°C
			Foundation Fieldbus	Note 2	-50°C TO 70°C
		Non Sparking Ex nA IIC T4 Gc	4-20 mA / DE/ HART/ Foundation Fieldbus	Note 1	-50°C TO 85°C
		Enclosure: IP66/ IP67	All	All	-
K	**UATR UKRAINE**	**Flameproof:** II 1/2 G Ex db IIC T6..T5 Ga/Gb II 2 D Ex tb IIIC T95°C…T120°C Db	All	Note 1	T5: -50°C TO 85°C T6: -50°C TO 65°C
		Intrinsically Safe: II 1 G Ex ia IIC T4 Ga FISCO Field Device (Only for FF Option) II 1 G Ex ia IIC T4 Ga	4-20 mA / DE/ HART	Note 2	-50°C TO 70°C
			Foundation Fieldbus	Note 2	-50°C TO 70°C
		Enclosure: IP66/ IP67	All	All	-

Notes:

1. Operating Parameters:

   Voltage = 11 to 42 VDC Current = 4-20 mA Normal

   = 9 to 32 V (FF) = 30 mA (FF)

2. Intrinsically Safe Entity Parameters
   a. Analog/ DE/ HART Entity Values:

Vmax = Ui = 30V	Imax= Ii = 105mA	Ci = 4.2nF	Li = 984 uH	Pi = 0.9W

Transmitter with Terminal Block revision E or Later

Vmax = Ui = 30V	Imax= Ii = 225mA	Ci = 4.2nF	Li = 0	Pi = 0.9W

Note : Transmitter with Terminal Block revision E or later
The revision is on the label that is on the module. There will be two lines of text on the label:

- First is the Module Part #: 50049839-001 or 50049839-002
- Second line has the supplier information, along with the REVISION:

XXXXXXX-EXXXX, THE "X" is production related, THE POSITION of the "E" IS THE REVISION.

   b. Foundation Fieldbus - Entity Values

Vmax= Ui = 30V	Imax= Ii = 180mA	Ci = 0nF	Li = 984 uH	Pi = 1W

Transmitter with Terminal Block revision F or Later

Vmax= Ui = 30V	Imax= Ii= 225mA	Ci = 0nF	Li = 0	Pi = 1 W
FISCO Field Device	Imax= Ii= 380 mA	Ci = 0nF	Li = 0	Pi = 5.32 W

Vmax= Ui = 17.5V
Note : Transmitter with Terminal Block revision F or later
The revision is on the label that is on the module. There will be two lines of text on the label:

- First is the Module Part #: 50049839-003 or 50049839-004
- Second line has the supplier information, along with the REVISION:

XXXXXXX-EXXXX, THE "X" is production related, THE POSITION of the "E" IS THE REVISION.

Approval Certifications

<table>
<tr><td rowspan="6">Marine Certificates</td><td>This certificate defines the certifications covered for the ST 800 Pressure Transmitter family of products, including the SMV 800 Smart Multivariable Transmitter. It represents the compilation of the five certificates Honeywell currently has covering the certification of these products into marine applications.
For ST 800 Smart Pressure Transmitter and SMV800 Smart Multivarible Transmitter</td></tr>
<tr><td>American Bureau of Shipping (ABS) - 2009 Steel Vessel Rules 1-1-4/3.7, 4-6-2/5.15, 4-8-3/13 & 13.5, 4-8-4/27.5.1, 4-9-7/13. Certificate number: 04-HS417416-PDA</td></tr>
<tr><td>Bureau Veritas (BV) - Product Code: 389:1H. Certificate number: 12660/B0 BV</td></tr>
<tr><td>Det Norske Veritas (DNV) - Location Classes: Temperature D, Humidity B, Vibration A, EMC B, Enclosure C. For salt spray exposure; enclosure of 316 SST or 2-part epoxy protection with 316 SST bolts to be applied. Certificate number: A-11476</td></tr>
<tr><td>Korean Register of Shipping (KR) - Certificate number: LOX17743-AE001</td></tr>
<tr><td>Lloyd's Register (LR) - Certificate number: 02/60001(E1) & (E2)</td></tr>
<tr><td>SIL 2/3 Certification</td><td>IEC 61508 SIL 2 for non-redundant use and SIL 3 for redundant use according to EXIDA and TÜV Nord Sys Tec GmbH & Co. KG under the following standards: IEC61508-1: 2010; IEC 61508-2: 2010; IEC61508-3: 2010.</td></tr>
<tr><td>MEASUREMENT INTRUMENTS DIRECTIVE (MID) 2004/ 22/ EC</td><td>Certificate Issued by NMI Certin B.V.
Mechanical Class: M3 Electromagnetic Environment: E3
Ambient Temperature Range: -25 ºC to + 55 ºC
<table>
<tr><th>Unit</th><th>Custom Calibration</th></tr>
<tr><td>STD820</td><td>0 to 1000 mBar</td></tr>
<tr><td>STD830</td><td>0 to 7 Bar</td></tr>
<tr><td>STA84L</td><td>0 to 35 Bar A</td></tr>
<tr><td>STG84L</td><td>0 to 35 Bar</td></tr>
<tr><td>STD870</td><td>0 to 100 Bar</td></tr>
<tr><td>STA87L</td><td>0 to 100 Bar A</td></tr>
<tr><td>STG87L</td><td>0 to 100 Bar</td></tr>
</table></td></tr>
</table>

Mounting & Dimensional Drawings

Reference Dimensions: $\frac{\text{millimeters}}{\text{inches}}$

Mounting Configurations (Dual head design)

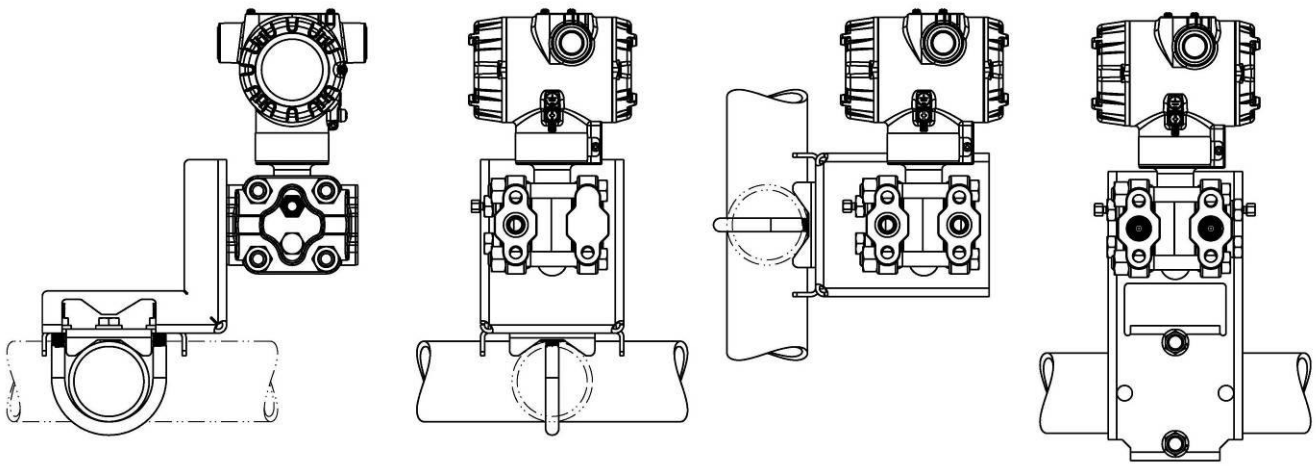

Dimensions (Dual head design)

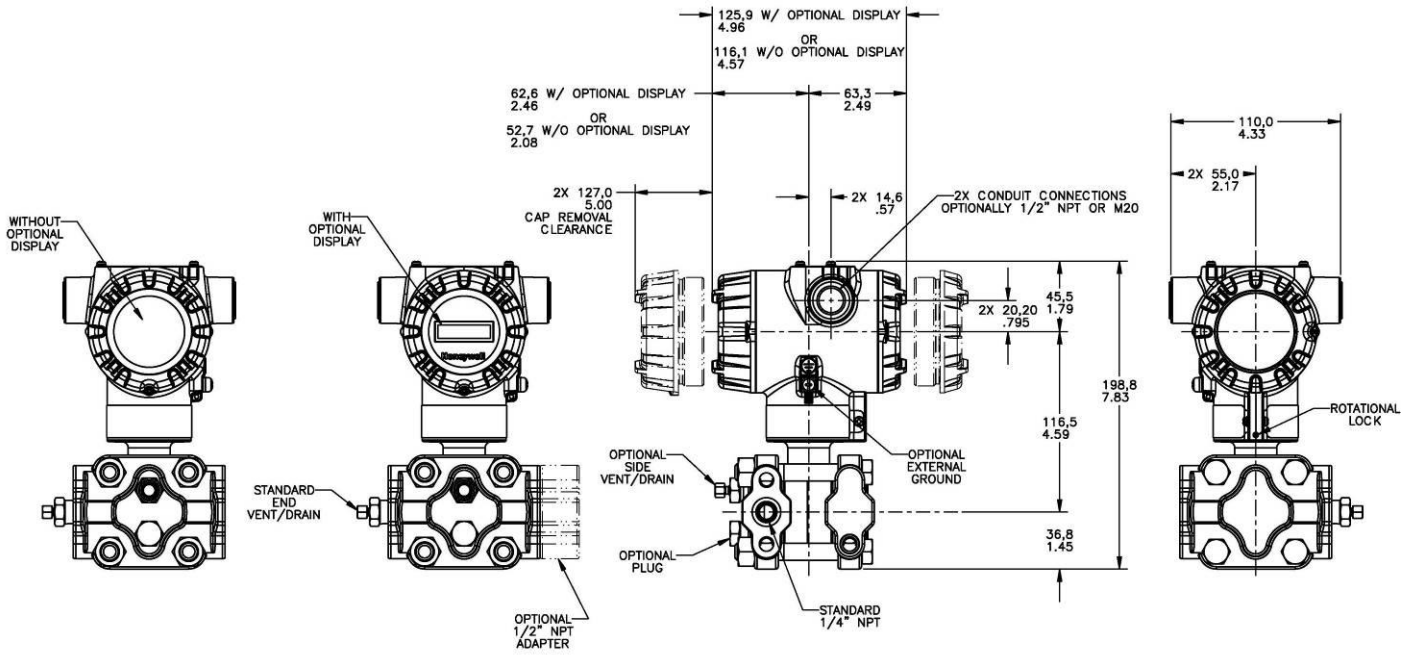

Figure 4 – Typical mounting dimensions of STA822 & STA840 for reference

Reference Dimensions: $\frac{\text{millimeters}}{\text{inches}}$

Mounting Configurations (Inline Designs)

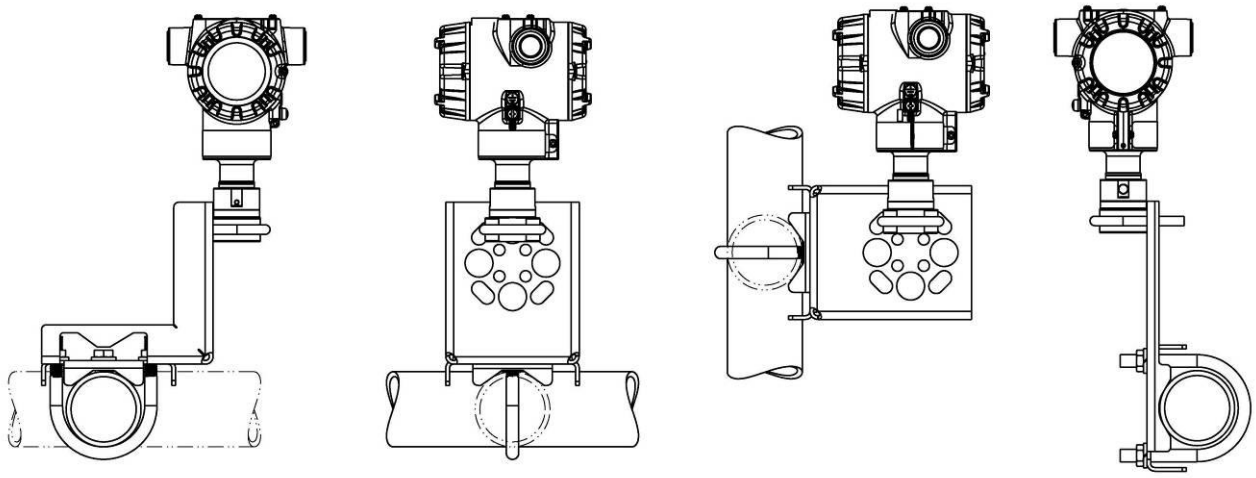

Dimension (Inline Design)

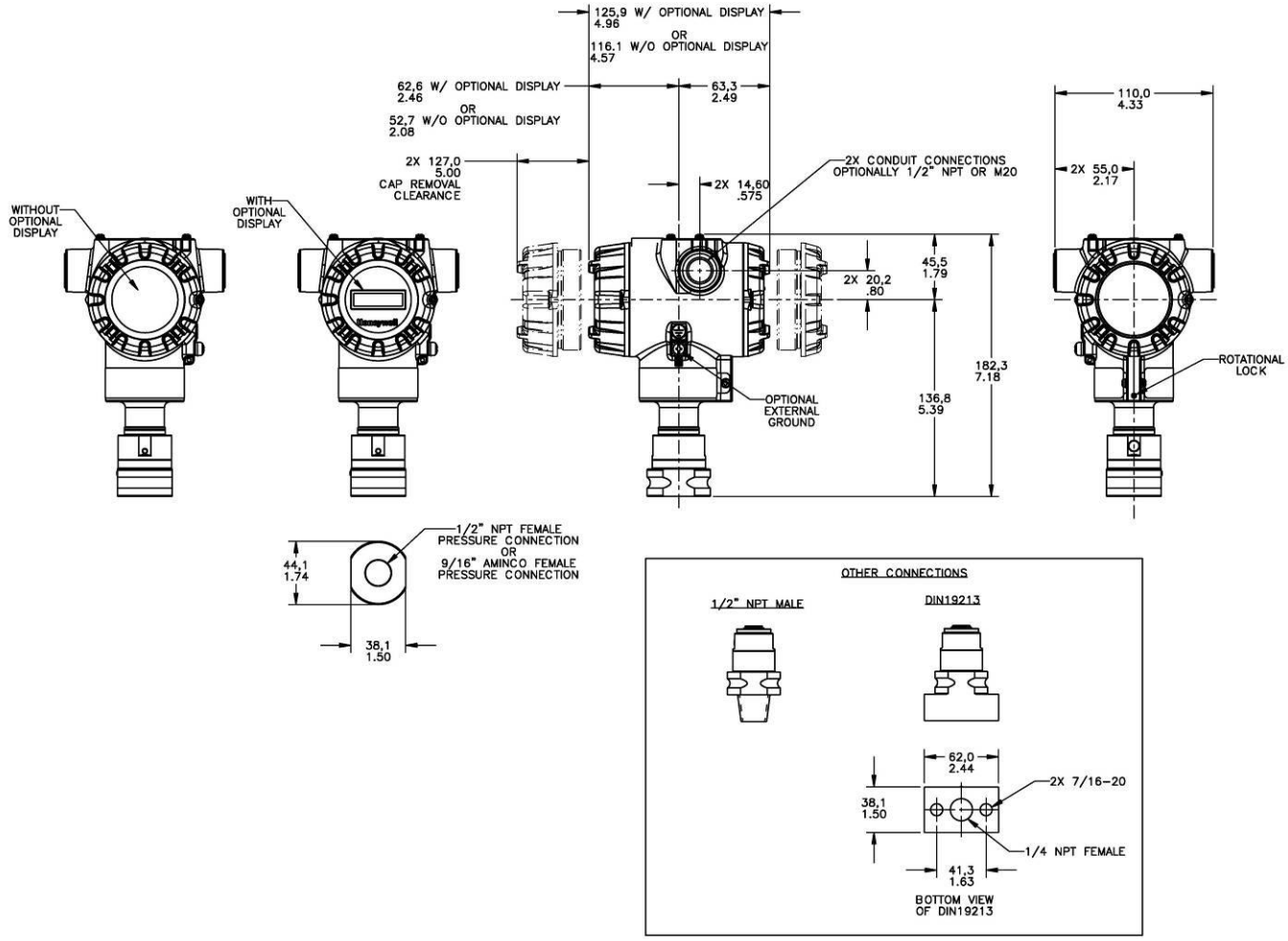

Figure 5 – Typical mounting dimensions of STA82L, STA84L, & STA87L for reference

Model Selection Guide

Model Selection Guides are subject to change and are inserted into the specifications as guidance only.

Model STA800 & STA80L
Absolute Pressure Transmitters

Model Selection Guide
34-ST-16-85 Issue 24

Instructions: Make selections from all Tables using column below the proper arrow. Asterisk indicates availability. Letter (a) refers to restrictions highlighted in the restrictions table. Tables delimited with dashes.

Key	I	II	III	IV	V	VI	VII	VIII (Optional)	IX
STA ___ -	_____ -	_ -	_ -	___ -	___ -	_ -	____ -	__.__.__ -	0000

KEY NUMBER	URL/Max Span	LRL	Min Span	Units	Selection			
Absolute Dual Head	780 (1040)	0 (0)	50 (65.0)	mm HgA (mbarA)	STA822	↓		
	500 (35)	0 (0)	5 (.35)	psia (barA)	STA840	↓		
Absolute In-Line	780 (1040)	0 (0)	50 (65.0)	mm HgA (mbarA)	STA82L		↓	
	500 (35)	0 (0)	5 (.35)	psia (barA)	STA84L			↓
	3000 (210)	0 (0)	30 (2.1)	psia (barA)	STA87L			↓

TABLE I	METER BODY SELECTIONS					
a. Process Head & Diaphragm Materials	Process Head/Reference Head Mat'l[1b]	Barrier Diaphragm Material				
	Plated Carbon Steel / Plated Carbon Steel	316L SS	A _____	*		
		Hastelloy® C - 276	B _____	*		
		Monel 400®	C _____	*		
		Tantalum	D _____	a		
		Gold Plated 316L SS	1 _____	*		
		Gold Plated Hastelloy C-276	2 _____	*		
		Gold Plated Monel 400	3 _____	*		
	316 Stainless Steel / 316 Stainless Steel	316L SS	E _____	*	*	*
		Hastelloy C - 276	F _____	*	*	*
		Monel 400	G _____	*		
		Tantalum	H _____	a		
		Gold Plated 316L SS	4 _____	*		
		Gold Plated Hastelloy C-276	5 _____	*		
		Gold Plated Monel 400	6 _____	*		
	Hastelloy C - 276 / 316 Stainless Steel	Hastelloy C - 276	J _____	*	*	*
		Tantalum	K _____	a		
		Gold Plated Hastelloy C-276	7 _____	*		
	Monel 400 / 316 Stainless Steel	Monel 400	L _____	a		
		Gold Plated Monel 400	8 _____	a		
b. Fill Fluid	Silicone Oil 200		_1____	*	*	*
	Fluorinated Oil CTFE		_2____	*	*	*
	Silicone Oil 704		_3____	*	*	*
c. Process Connection	Size/Type	Material				
	9/16" Aminco	Same as Process Head	__A___		*	*
	1/2" NPT (female)	Same as Process Head [1a]	__G___	*	*	*
	1/2" NPT (male)	Same as Process Head	__H___		*	*
	DIN 19213 (1/4" female NPT)	Same as Process Head	__D___	*	*	*
	G1/2 B Threaded Fitting	Same as Process Head	__B___		*	*
	M20	Same as Process Head	__N___		*	*
d. Bolt/Nuts Materials	None		___0__		*	*
	Carbon Steel		___C__	*		
	316 SS		___S__	*		
	Grade 660 (NACE A286) with NACE 304 SS Nuts		___N__	*		
	Grade 660 (NACE A286) Bolts & Nuts		___K__	p		
	Monel K500		___M__	p		
	Super Duplex		___D__	p		
	B7M		___B__	*		
e. Vent/Drain Type/Location	Head Type / Vent Type / Location / Vent Material					
	None / None / None / None		____0_		*	*
	Single Ended / None / None / None		____1_	*		
	Single Ended / Standard / Side / Matches Head Material[1]		____2_	*		
	Single Ended / Center Vent / Side / Stainless Steel Only		____3_	t		
	Dual Ended / Standard Vent / End / Matches Head Material[1]		____4_	*		
	Dual Ended / Center Vent / End / Stainless Steel Only		____5_	t		
	Dual Ended / Standard/Plug / Side/End / Matches Head Material[1]		____6_	*		
f. Gasket Materials	None		_____0		*	*
	Teflon® or PTFE (Glass Filled)		_____A	*		
	Viton®		_____B	*		
	Graphite		_____C	*		

[1] Except Carbon Steel Heads shall use 316SS Vent/Drain & Plugs
[1a] STA822,840 supplied via 1/2" flange adapter same material as process head except carbon steel shall use 316 SS
[1b] Reference head available only with Dual head models. In-line models supplied with process head only

TABLE II	Meter Body & Connection Orientation		STA84L & 87L	STA82L	STA822	STA840
Head/Connect Orientation	Standard	High Side Left, Low Side Right[2] / Std Head Orientation	1	*	*	*
	Reversed	Low Side Left, High Side Right[2] / Std Head Orientation	2	*		
	90/Standard	High Side Left, Low Side Right[2] / 90^0 Head Rotation	3	h		

TABLE III	AGENCY APPROVALS				
Approvals	No Approvals Required	0	*	*	*
	<FM> Explosion proof, Intrinsically Safe, Non-incendive, & Dustproof	A	*	*	*
	CSA Explosion proof, Intrinsically Safe, Non-incendive, & Dustproof	B	*	*	*
	ATEX Explosion proof, Intrinsically Safe & Non-incendive	C	*	*	*
	IECEx Explosion proof, Intrinsically Safe & Non-incendive	D	*	*	*
	SAEx Explosion proof, Intrinsically Safe & Non-incendive	E	*	*	*
	INMETRO Explosion proof, Intrinsically Safe & Non-incendive	F	*	*	*
	NEPSI Explosion proof, Intrinsically Safe & Non-incendive	G	*	*	*
	KOSHA Explosion proof, Intrinsically Safe & Non-incendive	H	*	*	*
	EAC Customs Union(Russia,Belarus,Kazakhstan)Ex Approval, Flame proof, Intrinsically Safe	I	*	*	*
	CCoE Explosion proof, Intrinsically Safe & Non-incendive	J	*	*	*
	UATR Flameproof, Intrinsically Safe & Dustproof	K	*	*	*

TABLE IV	TRANSMITTER ELECTRONICS SELECTIONS					
	Material	Connection	Lightning Protection			
a. Electronic Housing Material & Connection Type	Polyester Powder Coated Aluminum	1/2 NPT	None	A _ _	*	*	*
	Polyester Powder Coated Aluminum	M20	None	B _ _	*	*	*
	Polyester Powder Coated Aluminum	1/2 NPT	Yes	C _ _	*	*	*
	Polyester Powder Coated Aluminum	M20	Yes	D _ _	*	*	*
	316 Stainless Steel (Grade CF8M)	1/2 NPT	None	E _ _	*	*	*
	316 Stainless Steel (Grade CF8M)	M20	None	F _ _	*	*	*
	316 Stainless Steel (Grade CF8M)	1/2 NPT	Yes	G _ _	*	*	*
	316 Stainless Steel (Grade CF8M)	M20	Yes	H _ _	*	*	*
	Analog Output	Digital Protocol					
b. Output/ Protocol	4-20mA dc	HART Protocol		_ H _	*	*	*
	4-20mA dc	DE Protocol		_ D _	u	u	u
	none	Foundation Fieldbus		_ F _	*	*	*
	Indicator	Ext Zero, Span & Config Buttons	Languages				
c. Customer Interface Selections	None	None	None	_ _ 0	*	*	*
	None	Yes (Zero/Span Only)	None	_ _ A	f	f	f
	Basic	None	EN	_ _ B	*	*	*
	Basic	Yes	EN	_ _ C	*	*	*
	Advanced	None	EN, GE, FR, IT, SP, RU, TU	_ _ D	*	*	*
	Advanced	Yes	EN, GE, FR, IT, SP, RU, TU	_ _ E	*	*	*
	Advanced	None	EN, CH, JP	_ _ H	*	*	*
	Advanced	Yes	EN, CH, JP	_ _ J	*	*	*

TABLE V	CONFIGURATION SELECTIONS						
a. App S/W	Diagnostics						
	Standard Diagnostics			1 _ _	*	*	*
	Advanced Diagnostics (Above with Plugged Impulse Detection PILD)			2 _ _	*	*	*
b. Output Limit, Failsafe & Write Protect Settings	Write Protect	Fail Mode	High & Low Output Limits[3]				
	Disabled	High> 21.0mAdc	Honeywell Std (3.8 - 20.8 mAdc)	_ 1 _	f	f	f
	Disabled	Low< 3.6mAdc	Honeywell Std (3.8 - 20.8 mAdc)	_ 2 _	f	f	f
	Enabled	High> 21.0mAdc	Honeywell Std (3.8 - 20.8 mAdc)	_ 3 _	f	f	f
	Enabled	Low< 3.6mAdc	Honeywell Std (3.8 - 20.8 mAdc)	_ 4 _	f	f	f
	Enabled	N/A	N/A Fieldbus or Profibus	_ 5 _	g	g	g
	Disabled	N/A	N/A Fieldbus or Profibus	_ 6 _	g	g	g
c. General Configuration	General Configuration						
	Factory Standard			_ _ S	*	*	*
	Customer Configuration (Unit Data Required)			_ _ C	*	*	*

[2] Left side/Right side as viewed from the customer connection perspective

[3] NAMUR Output Limits 3.8 - 20.5mAdc can be configured by the custom

TABLE VI	CALIBRATION & ACCURACY SELECTIONS			STA84L, 87L	STA82L	STA822	STA840
	Accuracy	Calibrated Range	Calibration Qty				
a. Accuracy and Calibration	Standard	Factory Std	Single Calibration	A	*	*	*
	Standard	Custom (Unit Data Required)	Single Calibration	B	*	*	*
	Standard	Custom (Unit Data Required)	Dual Calibration	C	*	*	*
	Standard	Custom (Unit Data Required)	Triple Calibration	D	*	*	*
	High Accuracy	Factory Std	Single Calibration	E	s	s	s
	High Accuracy	Custom (Unit Data Required)	Single Calibration	F	s	s	s
	High Accuracy	Custom (Unit Data Required)	Dual Calibration	G	s	s	s
	High Accuracy	Custom (Unit Data Required)	Triple Calibration	H	s	s	s

TABLE VII	ACCESSORY SELECTIONS					
	Bracket Type	Material				
a. Mounting Bracket	None	None	0 _ _ _	*	*	*
	Angle Bracket	Carbon Steel	1 _ _ _	*	*	*
	Angle Bracket	304 SS	2 _ _ _	*	*	*
	Angle Bracket	316 SS	3 _ _ _	*	*	*
	Marine Approved Bracket	Carbon Steel	8 _ _ _	*		
	Marine Approved Bracket (In-Line)	Carbon Steel	9 _ _ _		*	*
	Marine Approved Bracket	304 SS	4_ _ _	*		
	Marine Approved Bracket (In-Line)	304 SS	A_ _ _		*	*
	Flat Bracket	Carbon Steel	5 _ _ _	*	*	*
	Flat Bracket	304 SS	6 _ _ _	*	*	*
	Flat Bracket	316 SS	7 _ _ _	*	*	*
b. Customer Tag	Customer Tag Type					
	No customer tag		_ 0 _ _	*	*	*
	One Wired Stainless Steel Tag (Up to 4 lines 26 char/line)		_ 1 _ _	*	*	*
	Two Wired Stainless Steel Tag (Up to 4 lines 26 char/line)		_ 2 _ _	*	*	*
c. Unassembled Conduit Plugs & Adapters	Unassembled Conduit Plugs & Adapters					
	No Conduit Plugs or Adapters Required		_ _ A0	*	*	*
	1/2 NPT Male to 3/4 NPT Female 316 SS Certified Conduit Adapter		_ _ A2	n	n	n
	1/2 NPT 316 SS Certified Conduit Plug		_ _ A6	n	n	n
	M20 316 SS Certified Conduit Plug		_ _ A7	m	m	m
	Minifast® 4 pin (1/2 NPT) (not suitable for X-Proof applications)		_ _ A8	n	n	n
	Minifast® 4 pin (M20) (not suitable for X-Proof applications)		_ _ A9	m	m	m

TABLE VIII	OTHER Certifications & Options: (String in sequence comma delimited (XX, XX, XX,....)					
Certifications & Warranty	None - No additional options required	00	*	*	*	
	Low Temperature Rating (-50 deg C min. ambient operative temperature limit)	LT	w	w	w	
	NACE MR0175; MR0103; ISO15156 (FC33338) Process wetted parts only	FG	*	*	*	b
	NACE MR0175; MR0103; ISO15156 (FC33339) Process wetted and non-wetted parts	F7	c	c	c	
	Marine (DNV, ABS, BV, KR, LR)	MT	d	d	d	
	EN10204 Type 3.1 Material Traceability (FC33341)	FX	*	*	*	
	MID Approved Transmitter - Contact Tech Support for specific MID approved ranges	MD			v	
	Certificate of Conformance (F3391)	F3	*	*	*	b
	Calibration Test Report & Certificate of Conformance (F3399)	F1	*	*	*	
	Certificate of Origin (F0195)	F5	*	*	*	
	FMEDA (SIL 2/3) Certification (FC33337)	FE	j	j	j	
	Over-Pressure Leak Test Certificate (1.5X MAWP) (F3392)	TP	*	*	*	
	Cert Clean for O_2 or CL_2 service per ASTM G93	OX	e	e	e	
	PMI Certification[1]	PM	*	*	*	
	Extended Warranty Additional 1 year	01	*	*	*	b
	Extended Warranty Additional 2 years	02	*	*	*	
	Extended Warranty Additional 3 years	03	*	*	*	
	Extended Warranty Additional 4 years	04	*	*	*	
	Extended Warranty Additional 15 years	15	*	*	*	

TABLE IX	Manufacturing Specials				
Factory	Factory Identification	0000	*	*	*

RESTRICTIONS

Restriction Letter	Available Only with		Not Available with	
	Table	Selection(s)	Table	Selection(s)
a			VIII	FG, F7
c	I d	_ _ _ 0,N,K,D,B _ _ _	I a	D,H,K,L,8, _ _ _ _
d	IV a	C,D,G,H _ _	VIIa	1,2,3,5,6,7_ _ _
e	Ib	_ 2 _ _ _ _ _		
f			IV b	_ F _
g			IVb	_ H, D _
h			Ie	_ _ _ _ 4,5,6 _ _
			VIIa	1,2,3,4,5,6,7,8 _ _ _
j	IV b	_ H _	Vb	_ 1,2,6 _
m	IV a	B,D, F, H _ _		
n	IV a	A,C, E, G _ _		
p			III	B - No CRN number available
s	Ia	A,E _ _ _ _ _ _		
t			1a	J, K, 7, L, 8
u			Va	2 _ _
			VIa	C,D,G,H
v	IV a	C,D,G,H _ _	IVb	_D,F_
w	Ib	_ 1 _ _ _ _ _	VIII	FE
b	Select Only one option from this group			

[1]The PM option is available on all Smartline Pressure Transmitter process wetted parts such as process heads, flanges, bushings and vent plugs except plated carbon steel process heads and flanges. PM option information is also available on diaphragms except Gold plated and STG and STA in-line construction pressure transmitters.

FIELD INSTALLABLE ACCESSORY KITS

Description	Kit Number
Integrally Mounted Basic Indicator Kit (Compatible with all Electronic Modules)	50049911-501
Integrally Mounted Advanced Indicator Kit (compatible with all Electronic Modules)	50049846-501
Terminal Strip w/o Lightening Protection for HART or DE Modules	50075472-531
Terminal Strip w/Lightning Protection Kit for HART or DE Modules	50075472-532
Terminal Strip w/o Lightening Protection FFB/*Profibus* Module	50075472-533
Terminal Strip w/Lightning Protection Kit for FFB/*Profibus* Module	50075472-534
HART Electronics Module	50049849-501
HART Electronics Module w/connection for external configuration buttons	50049849-502
DE Electronics Module	50049849-503
DE Electronics Module w/connection for external configuration buttons	50049849-504
FFB Electronics Module Kit	50049849-507
FFB Electronics Module w/connection for external configuration buttons	50049849-508

PRODUCT MANUALS

Description	Part Number
ST 800 Smart Transmitter User Manual - English	34-ST-25-35
ST 800 Smart Transmitter HART/DE Communications Manual - English	34-ST-25-38
ST 800 Smart Transmitter Safety Manual - English	34-ST-25-37
ST 800 Smart Transmitter Foundation Fieldbus Manual - English	34-ST-25-39
ST 800 Smart Transmitter Function Block Manual - English	34-ST-25-42

All product documentation is available at www.honeywellprocess.com.

Sales and Service

For application assistance, current specifications, ordering, pricing, and name of the nearest Authorized Distributor, contact one of the offices below.

ASIA PACIFIC
Honeywell Process Solutions,
Phone: + 800 12026455 or
+44 (0) 1202645583
(TAC) **hfs-tac-support@honeywell.com**

Australia
Honeywell Limited
Phone: +(61) 7-3846 1255
FAX: +(61) 7-3840 6481
Toll Free 1300-36-39-36
Toll Free Fax:
1300-36-04-70

China – PRC - Shanghai
Honeywell China Inc.
Phone: (86-21) 5257-4568
Fax: (86-21) 6237-2826

Singapore
Honeywell Pte Ltd.
Phone: +(65) 6580 3278
Fax: +(65) 6445-3033

South Korea
Honeywell Korea Co Ltd
Phone: +(822) 799 6114
Fax: +(822) 792 9015

EMEA
Honeywell Process Solutions,
Phone: + 800 12026455 or
+44 (0) 1202645583

Email: (Sales)
FP-Sales-Apps@Honeywell.com
or
(TAC)
hfs-tac-support@honeywell.com

Web
Knowledge Base search
engine **http://bit.ly/2N5VIdi**

AMERICAS
Honeywell Process Solutions,
Phone: (TAC) (800) 423-9883
or (215) 641-3610
(Sales) 1-800-343-0228

Email: (Sales)
FP-Sales-Apps@Honeywell.com
or
(TAC)
hfs-tac-support@honeywell.com

Web
Knowledge Base search
engine **http://bit.ly/2N5VIdi**

Specifications are subject to change without notice.

Authorized Distributor:

De Gidts & Feldman
INSTRUMENTATION & FILTRATION

De Gidts & Feldman B.V.
Almere – The Netherlands
E-mail sales@dgfg.nl
Website www.dgfg.nl

For more information
To learn more about SmartLine Pressure Transmitters visit **www.process.honeywell.com**
Or contact your Honeywell Account Manager

Process Solutions
Honeywell

1250 W Sam Houston Pkwy S
Houston, TX 77042

Honeywell Control Systems Ltd
Honeywell House, Skimped Hill Lane
Bracknell, England, RG12 1EB

Shanghai City Centre, 100 Jungi Road
Shanghai, China 20061

Honeywell

34-ST-03-85
April 2023

www.process.honeywell.com

©2023 Honeywell International Inc.